HAM TIPS

A PUBLICATION OF THE RCA ELECTRON TUBE DIVISION

VOL. 19, No. 1

FEBRUARY, 1959

THE WEEKEND SPECIAL

A Complete, Portable 40-Meter CW Station

By Lee Aurick, W2QEX

RCA Electron Tube Division, Harrison, N. J.

For many hams, a weekend jaunt or a vacation trip with the family means being off the air for the duration. The author, to whom such trips meant a sacrifice of practically the only time available for work at the home station, undertook to solve the problem by the design of a portable 40-meter cw station which would fit unobtrusively into the family luggage and yet provide a high degree of operating convenience and efficiency.

In planning the station, the author considered the following features essential:

(1) The entire station should fit in a portable typewriter case.

(2) The transmitter should have a vfo and provision for oscillator "spotting."

(3) To assure freedom from objectionable frequency variations during operation under marginal conditions, the vfo should have a regulated plate-voltage supply.

(4) The final should load properly when connected to a 72-ohm load (pre-cut 40-meter doublet with coaxial feed).

(5) The transmitter should include a single tuning and keying monitor.

(6) Changeover from "transmit" to "receive" should be a one-switch operation.

(7) The receiver should provide good bandspread for the 40-meter band.

(8) The receiver should deliver sufficient af-output power to operate a small built-in speaker.

(9) The entire station should use proved circuits and cost less than $100.

The rig shown in the accompanying photographs and circuit diagrams fulfills all these design requirements with one minor exception—the 66-foot doublet antenna and its 50-foot 72-ohm feeder, of course, do not fit easily into the portable typewriter case. They have to be carried elsewhere in the family luggage.

Circuit Details

The limitations on the size and cost of the station dictated the use of a two-tube regenerative receiver. The one which seemed to offer the most advantages and best met the other requirements was the "Novice Special" de-

Four brackets made of ¾-inch aluminum angle are utilized. One supports the power-supply "deck." The others, mounted on three sides of a portable typewriter case, support the front panels of W2QEX's 40-meter cw station.

scribed by Mix in QST for June, 1956. With minor modifications (a slight change in the method of tuning, and the use of a permanently mounted 40-meter coil instead of plug-in coils), this receiver was adopted. The power supply described by Mix for use with the receiver was also adopted, and used for the transmitter as well as the receiver.

As shown in Figure 1, RCA-6AQ5-A's are used in both the detector and af-amplifier stages. The detector provides smooth and stable regeneration, and the tuning arrangement spreads the 40-meter band over 70 divisions (10 to 80) on the tuning dial. The af-amplifier stage delivers sufficient output to operate the built-in speaker on practically every station that can be heard.

L_1 is a 9-turn length of B & W Type 3015 Miniductor, tapped at 2 turns (terminal 2), 4¼ turns (terminal 3), and 5 turns (terminal 4). C_3 is the "bandset" capacitor which, with the fixed mica padder capacitor, C_2, determines the tuning range. C_1 is the "bandspread" capacitor. When C_3 is properly set, C_1 covers a range extending approximately 40 kilocycles beyond each edge of the 40-meter band. R_2 is the regeneration control, and S_1 is the speaker-headphone selector switch.

Transmitter

The transmitter circuit is shown in Figure 2. The variable-frequency-oscillator stage uses an RCA-6AU6 in a Clapp circuit with electron-coupled output. The oscillator is tuned by the "bandset" capacitors C_{13} and C_{14}, and the "bandspread" capacitor C_{15}. The combination of C_{20} and L_4 in the plate circuit of the 6AU6 is tuned to the center of the cw portion of the 40-meter band, and covers this portion of the band without retuning.

An RCA-OA2 voltage-regulator tube is used to provide constant voltage for grid No. 2 of the 6AU6, which is the "plate" of the oscillator.

Because the RCA-5763 is a single-ended type and is operated as a "straight-through" rf amplifier, the output stage is neutralized to minimize any tendency to self-oscillation. The neutralizing circuit is extremely simple and requires no adjustments. All that is necessary is the connection shown in Figure 2 between the bottom of L_4 and pin 2 of the 5763 socket. The capacitance between pin 2, which has no internal connection, and the plate pin (pin 1) provides a feedback voltage of the proper phase and amplitude for neutralization.

The output-tank circuit of the amplifier (C_{24}, L_5, and C_{25}) is a simplified pi network designed to provide proper loading for the 5763 when connected to the 72-ohm feeder for the 40-meter doublet antenna.

Switch S_3 is a momentary-contact push-button type which, when depressed, applies plate and screen-grid voltage to the 6AU6, permitting the oscillator to be "spotted" to the received frequency.

An NE-2, 1/25-watt neon lamp, is used as

Figure 1: Circuit of the two-tube regenerative receiver.

C_1—100 $\mu\mu$f, variable (Hammerlund type Mc-100M or equivalent)
C_2—330 $\mu\mu$f, mica
C_3—7-45 $\mu\mu$f, ceramic trimmer
C_4—100 $\mu\mu$f, mica
C_5, C_6, C_7, C_{12}—0.001 μf, disc ceramic
C_8—1 μf, 400 v, paper
C_9—0.02 μf, 400 v, paper
C_{10}—10 μf, 25 v, electrolytic
C_{11}—1 μf, 400 v, paper
L_1—see text
L_2—35 Henries @ 15 ma (Thordarson type 20C51 or equivalent)
R_1—6.8 megohms, 0.5 w
R_2—50,000 ohms, 4 w, w.w. (Mallory type M50 MPK or equivalent)
R_3—150,000 ohms, 1 w
R_4—50,000 ohms, ½ w
R_5—330 ohms, 1 w
R_6—1000 ohms, 5 w
RFC1—2.5 MH
S_1—S.P.S.T., toggle switch
SPKR—RCA type 222S1
T_1—pri. 5000 ohms, sec. 3.5 ohms, 5 w (Thordarson type 24S51 or equivalent)

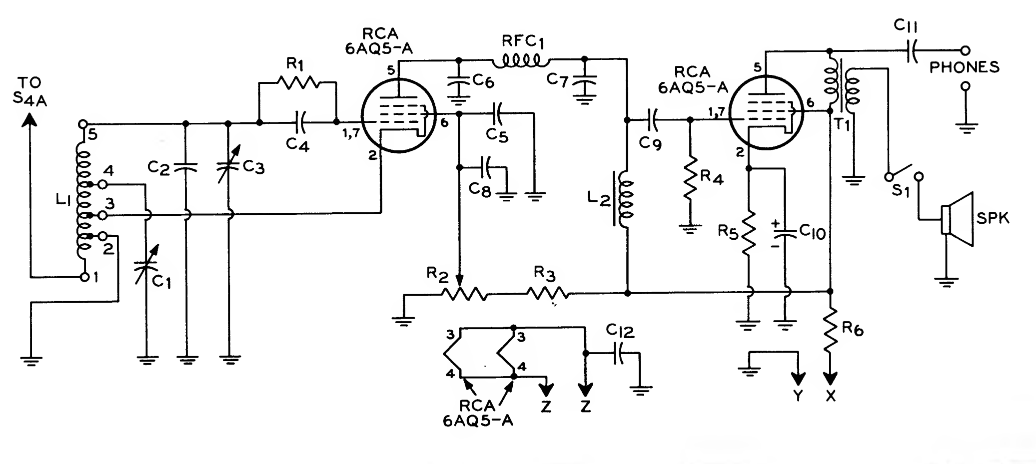

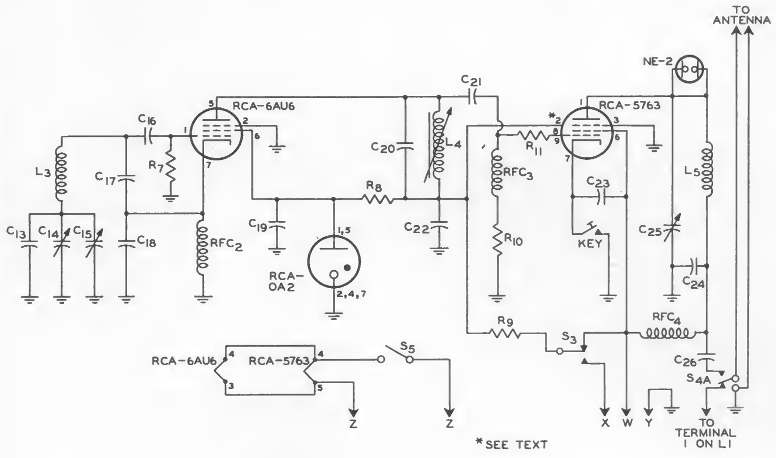

Figure 2: Transmitter circuit.

C_{13}—25 μμf mica
C_{14}—4.5-25 μμf, ceramic trimmer
C_{15}—10 μμf, variable (Cardwell type PL-6000 or equivalent)
C_{16}, C_{20}, C_{21}, C_{22}—100 μμf, mica
C_{17}, C_{18}—270 μμf, mica
C_{19}, C_{23}—0.001 μf, ceramic
C_{24}—150 μμf, mica
C_{25}—35 μμf, variable (Hammerlund type MC-35S or equivalent)
C_{26}—0.03 μf, ceramic
L_3,L_4, L_5—see text
Neon Lamp—type NE-2
R_7—22,000 ohms, 0.5
R_8—5,600 ohms, 2 w
R_9—6800 ohms, w.w., 5 w
R_{10}—18000 ohms, 0.5 w
R_{11}—200 ohms, 0.5 w
RFC_2—0.5 millihenries
$RFC_{3,4}$—2.5 millihenries
S_3—S.P.D.T., push button, momentary-contact switch
S_4—D.P.D.T., toggle switch
S_5—S.P.S.T., rotary switch

a tuning and keying monitor. The leads of this lamp are soldered to the stator of C_{25}. The lamp is mounted so that its tip protrudes through a small hole in the front panel directly below the tuning knob for C_{25}.

The oscillator tank coil L_3 is a 37-turn length of B & W type 3012 Miniductor. L_4 is 23 turns of No. 20 enameled wire wound on a CTC type (LS-4) ½-inch diameter iron-core form. L_5 is 28 turns of No. 20 enameled wire, 1¼ inches in diameter and 1½ inches long. L_5 may also be a B & W type MC, 40-meter coil with the link winding and 5-prong plug-in base removed, mounted on feed-through insulators.

Switch S_4 is the transmit-receive switch, and applies high voltage and the antenna lead-in to either the transmitter or receiver.

Switch S_5 is used to remove heater voltage from the transmitter tubes during long stand-by periods.

Assembling the Complete Station

The entire station was installed in a portable typewriter case approximately 12¾ inches square and 4¼ inches deep.

To simplify construction and maintenance, the transmitter, receiver, and common power supply were built on separate "decks" and the front panel was divided into two "operating areas," which can be individually removed. The left-hand area contains the power supply (the heaviest item) and the receiver; the right-hand area the transmitter. The panels and "decks" occupy a space about 9¼ inches high. The 3¼-inch-high compartment at the bottom of the case is used to store the line-cord, key, and station log.

The front panels are supported by brackets made of ¾-inch aluminum angle mounted on three sides of the case. These brackets are recessed about ⅛ inch so that the front panels are flush with the edges of the case. For additional rigidity, the three "decks" were made 4⅛ inches deep so that their rear edges rest against the rear of the case. The "decks" containing the receiver and power supply are 6⅜ inches wide, and the transmitter "deck" is 6⅝ inches wide. A small bracket supports the power-supply "deck."

To minimize coupling between the oscillator-grid and amplifier-plate coils, these coils are mounted at opposite ends of the transmitter "deck," with their axes at right angles.

The oscillator-grid and amplifier-plate coils are mounted at opposite ends of the transmitter "deck" with their axes at right angles. The oscillator-plate coil is mounted below the "deck."

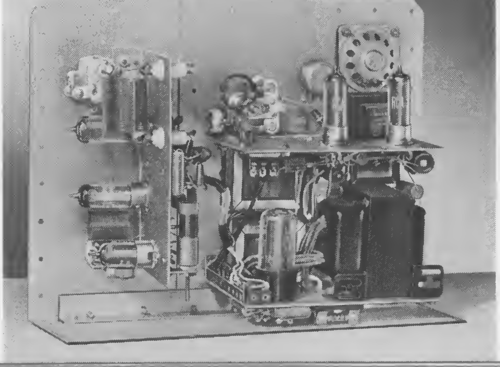

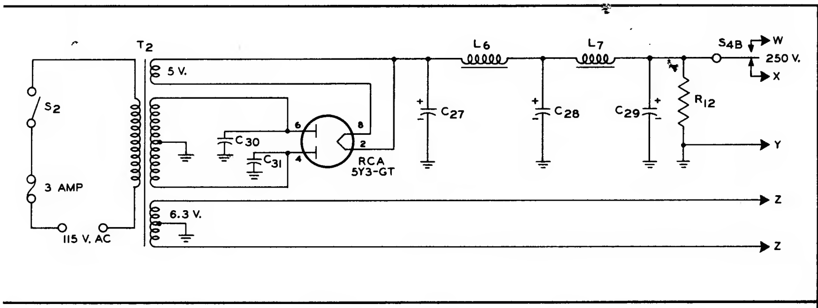

Figure 3: Power-supply circuit.

C_{27}, C_{28}, C_{29}—16 µf, 450 v, electrolytic
C_{30}, C_{31}—0.001 µf, disc ceramic
L_6, L_7—16 Henries @ 50 ma (Stancor type C-1003 or equivalent)
R_{12}—50,000 ohms, 5 w
S_2—S.P.S.T., toggle switch
T_2—500 v C.T. @ 70 ma., 5.0 v @ 2.0 amp, 6.3 v @ 2.5 amp (Stancor type PM-8403 or equivalent)
Fuse—3 amp

The oscillator-plate coil is mounted below the "deck."

To assure mechanical stability in the oscillator circuit, L_3 is rigidly mounted and connected by a very short lead to the oscillator-tuning capacitor C_{15}. In addition, the rotor of C_{15} is grounded through a rigid No. 10 copper-wire connection to a ground lug on the "deck" directly below the capacitor.

The only critical point in the receiver is the position of the feedback tap (terminal 2) on L_1. If the receiver does not regenerate smoothly, try moving this tap ¼ inch at a time. It will be found easier to solder connections to this coil if the turns on both sides of the tap points are first depressed.

The power supply, shown in Figure 3, requires no special mention.

Station Performance

This 40-meter portable station has met every one of the operating requirements initially established. The best DX achieved to date has been about 500 miles, using a low and hastily erected doublet antenna, and with 225 volts on the plate of the 5763. Thorough workouts, under a variety of operating conditions during the 1958 ARRL Field Day, summer vacations in the country, and several weekend trips, have convinced one ham family that amateur radio and family travel are not necessarily incompatible.

From your local RCA distributor, headquarters for RCA receiving and power tubes.

RCA HAM TIPS is published by the RCA Electron Tube Division, Harrison, N. J. It is available free of charge from RCA distributors.

•

Harvey Slovik, Editor

SEC. 34.66 P.L.& R.

GEORGE D. BARBEY CO., INC.
Reading Pottstown
Lancaster Lebanon

FORM 3547 REQUESTED

HAM TIPS

A PUBLICATION OF THE RCA ELECTRON TUBE DIVISION

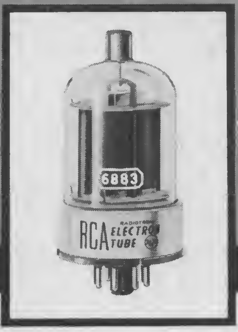

VOL. 19, NO. 2 JUNE, 1959

5-BAND MOBILE TRANSMITTER

A 50-Watt Rig for Phone and CW Operation

By George D. Hanchett, W2YM

RCA Electron Tube Division, Harrison. N. J.

> Did you know that a reciprocal agreement makes it possible for United States radio amateurs to operate their ham equipment in Canada—and vice versa?* This agreement has probably inspired many hams—as it did W2YM—to include portable or mobile operation in their cross-the-border vacation plans.

The 50-watt transmitter described in this article started out to be a simple single-band mobile job for use on a Canadian fishing trip. As the design progressed, however, more and more features seemed necessary or desirable, and it finally emerged as a five-band, crystal-controlled rig for phone and CW operation on 80, 40, 20, 15, and 10 meters.

This transmitter features a bandswitching system which automatically provides the proper drive for the final on each band, and remote control of practically all operating functions from a dashboard control unit. It was designed to operate from a 12.6-volt car battery and 450-volt, 250-milliampere dynamotor. With minor modifications, as described later, the rig can be operated from dynamotors or other plate-supply sources delivering as little as 300 volts.

Figure 3 shows the circuit of the transmitter. For its structural features and layout, see the photographs on pages 3 and 4, as well as the picture below.

The rf section consists of a crystal-oscillator stage using an RCA-7056, a buffer-frequency-multiplier stage using an RCA-7054, and a final stage using an RCA-6883. The modulator section includes a two-stage voltage amplifier using an RCA-7058 twin triode, and a class AB_1 output stage using RCA-7027-A's.

Recently introduced types, the 7054, 7056, and 7058 are similar, respectively, to the 12BY7A, 6CB6, and 12AX7, but specially designed for use in mobile communications equipment operating from 6-cell storage batteries. These types have heaters which operate dependably at any voltage between 12 and

---

*See FCC Commission Rules and Regulations, Part 12—Amateur Radio Service, Appendix 4.

15 volts and can withstand momentary excursions from 11 to 16 volts.

The 6883 is the 12.6-volt equivalent of the 6146.

The 7027-A's used in the output stage of the modulator are RCA beam power tubes designed especially for use in high-fidelity applications. They have characteristics similar to those of the 6L6-GB but with substantially higher plate-voltage and grid-No. 2 voltage ratings (600 volts and 500 volts, respectively) and higher power-output capabilities in class AB$_1$ service. They were selected for use in this transmitter because their high plate- and grid-No. 2-voltage ratings permitted them to be operated directly from the 450-volt supply, and because they easily provide the audio power required for 100% plate and grid-No. 2 modulation of the 6883.

Keying for CW operation is accomplished in the cathode circuit of the final amplifier.

The power-supply unit, shown schematically in Figure 1, contains the dynamotor, a filter capacitor for the 450-volt line, the relays used to open and close the main battery and dynamotor-input circuits, and fuses for these circuits.

The dashboard control unit, shown schematically in Figure 2, contains the heater-and plate-power on-off switches, a crystal-selector switch, the receiver-B+ switch and relay, and a switch used to transfer the car speaker from the broadcast receiver to the communications receiver and vice versa. It also contains a heater-circuit fuse, pilot lamps showing the condition of the heater and plate-supply circuits, and the input connectors for the microphone and key.

Circuit Details

The transmitter is designed to use 3.5-Mc crystals for 80 meters, 3.5- or 7-Mc crystals for 40 meters, and 7-Mc crystals for all other bands. In the 80-, 40-, 20-, and 15-meter positions of the bandswitch (S$_1$), the oscillator output is untuned. In the 10-meter position of the bandswitch, the oscillator output is tuned to twice the crystal frequency—that is, to 14 Mc—by C$_6$ and L$_1$. The second stage, therefore, operates as an amplifier on 80 meters, as either an amplifier or a doubler on 40 meters (depending on the crystal used), as a doubler on 20 and 10 meters, and as a tripler on 15 meters.

L$_2$, the grid-circuit coil for the 6883, is a 2-inch length (32 turns per inch) of B & W Type 3008 Miniductor, tapped as shown in Figure 3, and is tuned by C$_{15}$. In the 80-meter position of the bandswitch, the total capacitance across L$_2$ is increased by the addition of C$_{13}$. The 6883 is neutralized by a bridge circuit consisting of C$_{14}$, RFC$_4$, and C$_{16}$ to assure good stability of the 6883 on all bands.

The plate tank for the 6883 is a conventional pi-network type using two tapped coils. L$_4$, the coil for the 20-, 15-, and 10-meter bands, is a 10-turn winding of No. 10 enameled copper wire, having an inside diameter of 1 inch and an overall length of 1¾ inches. L$_5$, which is in series with L$_4$ for the 80- and 40-meter bands, is an 18-turn section of B & W Type 3018 inductor. Positions of the taps on L$_4$ and L$_5$ are given in Figure 3.

L$_3$ is a parasitic-suppressor choke consisting of 6 turns of plastic-insulated hookup wire, about ¼ inch in diameter, and is installed directly between the plate-cap connection of the 6883 and the plate end of RFC$_5$.

The adjustable loading-capacitance at the output end of the pi network consists of a 140-μμf variable capacitor (C$_{26}$), and a group of fixed capacitors controlled by the bandswitch and the "Coarse Loading" switch S$_3$. A 500-μμf capacitor (C$_{25}$) is connected in parallel with C$_{26}$ in the 80-meter position of

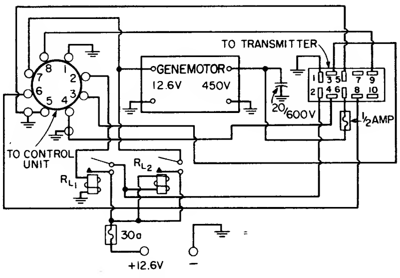

Figure 1: mobile power supply.

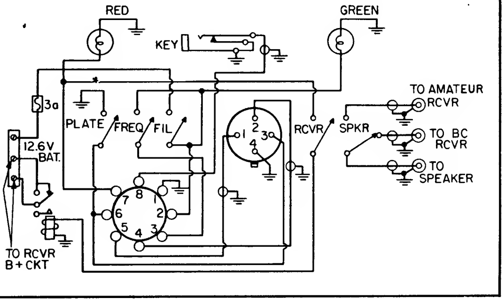

Figure 2: mobile control unit.

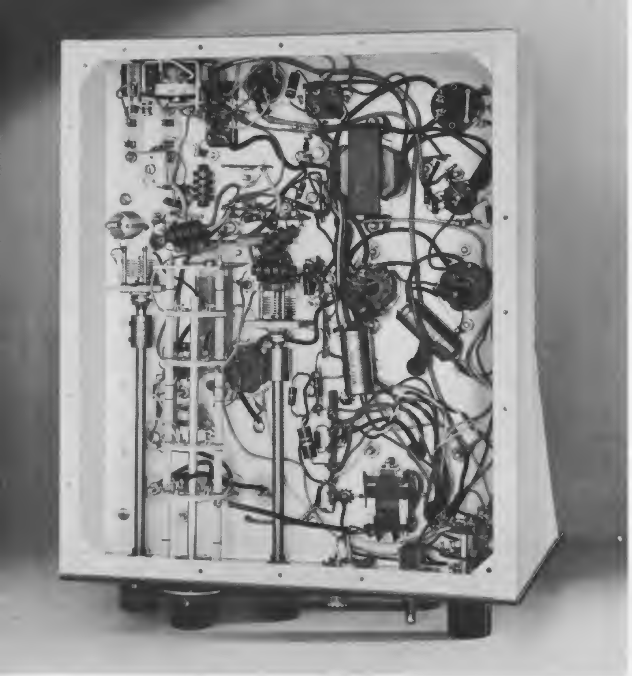

The microphone-cable shield is not grounded anywhere except at the socket for the 7058.

the bandswitch, and the nine 150-μμf capacitors (C_{27} through C_{35}) are successively added in parallel with C_{26} when S_3 is rotated counterclockwise.

The modest and noncritical drive requirements of the 6883 permitted the use of a simple step-type drive control ganged with the bandswitch. As shown in Figure 3, section S_{1b} of the bandswitch is connected to taps on a resistive voltage-divider network across the 450-volt supply circuit, and automatically adjusts the grid-No. 2 voltage of the 7054 buffer/frequency multiplier so as to provide the proper drive for the 6883 on each band.

The voltage-divider network shown at the input to the modulator circuit in Figure 3 was designed for use with the transistorized microphone described in the September, 1956, issue of HAM TIPS. (Please note that the three-wire cable shown in this previous HAM TIPS article has been changed to a four-conductor cable. This change was made so that the ground connection for audio can be made right at the 7058 socket, thereby eliminating any possibility of ground-current pickup.) Alternate input connections for use with a carbon microphone are also shown in Figure 3 (see inset).

To minimize the drain on the 450-volt supply under no-signal conditions, the 7027-A's are operated with somewhat higher bias than that required for true class AB_1 operation. Although this method of operation might cause severe distortion of a steady-tone modulating signal, it has relatively little effect on the quality of speech modulation because of the very low average power of speech signals.

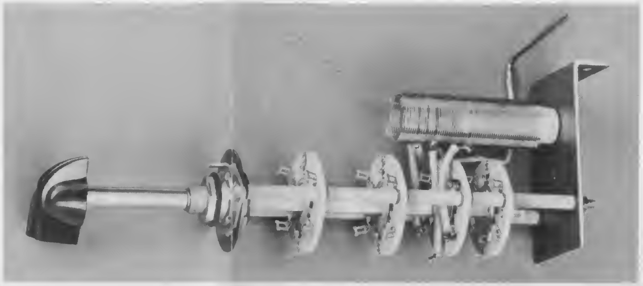

Close-up view of the bandswitch shows detail of 6883 grid coil.

Changeover from phone to CW operation is accomplished by means of the "PHONE-TUNE-CW" switch (S_6). In its "TUNE" position, this switch removes grid-No. 2 voltage from the 6883 and plate and grid-No. 2 voltage from the 7027-A's, so that the oscillator and buffer/multiplier stages can be tuned without danger of damage to the final amplifier.

The meter and associated switch (S_2) are used to measure: the 7054 grid-No. 1 and plate current; the 6883 grid-No. 1, grid-No. 2, and plate currents; and the combined plate and screen currents of the 7027-A's.

Switch S_5 is mounted on the modulator gain-control potentiometer (R_{29}), and may be used to remove heater voltage from the modulator tubes when long periods of CW operation are contemplated.

Mechanical Features

The transmitter was built on a 10-inch by 12-inch by 3-inch aluminum chassis and a 10-inch by 10-inch panel. The tubes and output network of the rf section are enclosed in a 5-inch by 7-inch by 9-inch aluminum utility box.

The bandswitch (S_1), shown on page 3, was assembled from Centralab steatite wafers and spacers to permit each section to be located as near as possible to the associated stage or components. L_2, the grid coil for the final stage, is mounted on a small standoff insulator on the bandswitch support bracket.

The taps on L_2 were made by cutting the coil stock ½ turn beyond the desired tap point, bending back the cut ends ½ turn, and twisting them together. The twisted leads were then soldered to make them as stiff as possible. (This procedure is repeated for each tap, making sure that the removed turns are not counted.)

The crystal-selector switch and relay permit change of the operating frequencies directly at the operating position. If the crystals are selected so that the resulting output frequencies are separated by not more than about 0.05%, it will not be necessary to readjust the transmitter when shifting from one crystal to the other.

Looking at the top of W2YM's five-band mobile transmitter. Note neutralizing capacitor C_{16} mounted on small bracket and standoff insulation between 6883 and 7054.

The "DYNAMOTOR ON-OFF" switch on the transmitter panel and a local microphone connector (J_1) permit the transmitter to be operated directly at its location in the trunk compartment.

Modifications

If the transmitter is to be operated from a plate supply delivering less than 450 volts, it will be necessary to change the values of the series resistor in the plate-supply circuit for the oscillator and buffer/doubler stages (R_{22}), the grid-No. 2 resistor for the 6883 (R_{12}), and the cathode resistors for the 7027-A's (R_{32} and R_{33}). The proper values for these resistors for various plate-supply voltages are shown in Figure 3.

This transmitter has been in use for about one year and has produced very rewarding signal reports as well as some excellent DX. The reports indicate that the quality of the phone signals provided by the transistorized microphone is greatly superior to that of most mobile transmitters using conventional carbon microphones.

Figure 3: Schematic diagram and parts list of the five-band mobile transmitter. See inset for suggested speech amplifier circuit for use with carbon microphone.

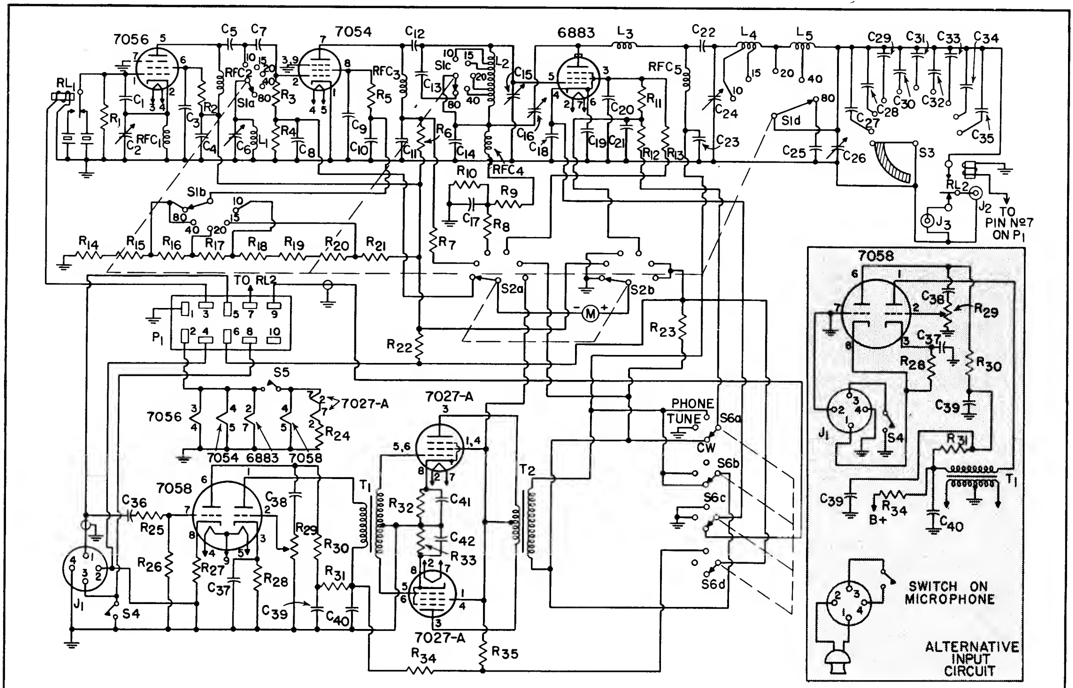

C_1—22 μμf, mica
C_2—80-400 μμf, compression mica
C_3, C_4, C_8, C_9, C_{10}, C_{11}, C_{17}, C_{18}, C_{19}, C_{20}, C_{21}—.001 μf, Disc Ceramic, 600 v
C_5, C_7, C_{12}, C_{18}, C_{19}, C_{20}, C_{21}—.002 μf, mica
C_6, C_{15}—50 μμf, variable (Hammarlund HF-50 or equiv.)
C_{13}—47 μμf, NPO Ceramicon or equiv.
C_{14}—.001 μf (Erie Feed-Thru Ceramicon or equiv.)
C_{16}—3.5-12 μμf, tubular trimmer (Centralab or equiv.)
C_{22}—.002 μf, mica, 1500 v (Aerovox #1467LS or equiv.)
C_{23}—.001 μf, 1500 v, disc ceramic
C_{24}—325 μμf, variable (Hammarlund MC-325-M or equiv.)
C_{25}—500 μμf, mica
C_{26}—140 μμf, variable (Hammarlund HF-140 or equiv.)
C_{27}, C_{28}, C_{29}, C_{30}, C_{31}, C_{32}, C_{33}, C_{34}, C_{35}—150 μμf, mica
C_{36}—.01 μf, 400 v, paper
C_{37}—10 μf/25 v, electrolytic
C_{38}—.005 μf, 400 v, paper
C_{39}, C_{40}—20 μf/450 v, dual electrolytic
C_{41}, C_{42}—50 μμf/50 v, electrolytic
J_1—Amphenol #91-PC4F or equiv.
J_2—antenna connector, coax.
J_3—receiver-antenna connector, coax.
L_1—12 turns B & W #3007
L_2—57 total turns B & W #3008, tapped at 5½, 8¼, 11½, and 26½ turns from grid end
L_3—6 turns hook-up wire, ¼" diameter
L_4—11 turns #10 enameled wire, 1" inside diameter, 1¾" long, tapped at 5½ and 8½ turns from plate end
L_5—18 turns B & W #3018, tapped at 8 turns from L_4
M—0-3 ma, 2"
P_1—Jones type 300 (P310AB) or equiv.
R_1—100,000 ohms/½ watt
R_2—33,000 ohms/½ watt
R_3—68,000 ohms/½ watt
R_4, R_5, R_6, R_7, R_8, R_{10}, R_{13}, R_{27}, R_{28}—1,000 ohms/½ watt
R_9—27,000 ohms/1 watt
R_{11}—110 ohms/1 watt (made by connecting two 220-ohm/½-watt resistors in parallel)
R_{12}—12,000 ohms (300 v), 18,000 ohms (350 v), 22,000 ohms (400 v), 24,000 ohms (450 v)—2 watts
R_{14}, R_{15}, R_{16}, R_{17}, R_{18}, R_{19}, R_{20}—5,100 ohms/½ watt
R_{21}—12,000 ohms/1 watt
R_{22}—none (300 v), 1,200 ohms (350 v), 3,300 ohms (400 v), 4,700 ohms (450 v)—1 watt
R_{23}, R_{35}—10 ohms/½ watt
R_{24}—1 ohm/½ watt
R_{25}, R_{26}, R_{30}—47,000 ohms/½ watt
R_{29}—½ megohm/½ watt, volume control with switch (S_5)
R_{31}, R_{34}—3,900 ohms/½ watt
R_{32}, R_{33}—860 ohms (300 v), 1,000 ohms (350 v), 1,200 ohms (400 v), 1,500 ohms (450 v)—2 watts
RFC_1, RFC_2, RFC_4—2.5 mh, National R-50 or equiv.
RFC_3—1.0 mh, National R-50 or equiv.
RFC_5—1.0 mh, National R-300 ST or equiv.
RL_1, RL_2—12-volt dc relays, SPDT
S_1—4 pole, 5 position (made from Centralab PA-305 index and four PA-17 steatite sections)
S_2—2 pole, 6 position (Centralab PA-2003 or equiv.)
S_3—single pole, 10 position, progressively opening (Centralab PA-2052 or equiv.)
S_4—SPST, toggle
S_5—SPST (see R_{29})
S_6—4 pole, 3 position (Centralab PA-2011 or equiv.)
T_1—3:1 single plate to push-pull grids (Thordarson 20A19 or equiv.)
T_2—10,000 ohms P to P to RF load (Thordarson 21M67 or equiv.)

25 out of the 34 transmitting-type tubes used in ARRL Handbook transmitters and modulators are High-Perveance Beam Power types

High-perveance beam power tubes—originally developed by RCA—are sweeping the field.

For example, in the 1959 Radio Amateur's Handbook, the official technical textbook of the ARRL, 21 of the 22 transmitter and modulator circuits shown employ transmitting-type power tubes.

Why do transmitter designers "standardize" on high-perveance beam power tubes? First: Beam power makes it practicable to use smaller, less expensive drivers... fewer stages...fewer components...fewer tuning controls...simplified band-switching. Second: High-perveance design enables you to get the power you want at lower plate voltage. And you know the savings that can mean.

So whether you are rebuilding or "re-tubing," ask for RCA High-Perveance Beam Power Tubes. They're available in all amateur power ratings—from your RCA Industrial Tube Distributor.

RADIO CORPORATION OF AMERICA
Electron Tube Division **Harrison, N. J.**

For the name of your nearest RCA Industrial Tube Distributor, call Western Union by 'phone and ask for Operator 25.

From your local RCA distributor, headquarters for RCA receiving and power tubes.

RCA HAM TIPS is published by the RCA Electron Tube Division, Harrison, N. J. It is available free of charge from RCA distributors.

Harvey Slovik, Editor

WHEN MAILING
PLACE POSTAGE HERE

IF IT'S ELECTRONICS
CALL BARBEY'S FIRST

READING PA.
BLK. RT.
U.S. POSTAGE
02
PB METER 314629

GEORGE D. BARBEY CO., INC.
Reading Pottstown
Lancaster Lebanon

FORM 3547 REQUESTED

HAM TIPS

A PUBLICATION OF THE RCA ELECTRON TUBE DIVISION

VOL. 19, NO. 3 AUGUST, 1959

FOR SSB SERVICE:

Cathode-Driven Linear Amplifier Using RCA-7094 Beam Power Tube

By Claude E. Doner, W3FAL

RCA Electron Tube Division, Lancaster, Pa.

This article features an extremely stable, five-band, cathode-driven linear amplifier for single-sideband service. Employing a single RCA-7094 beam power tube, the amplifier provides bandswitched operation on 80-, 40-, 20-, 15-, and 10-meter bands and is easily constructed and adjusted. Under the conditions described by W3FAL, it delivers a peak envelope power of approximately 200 watts.

The high power gain, high efficiency, and low distortion necessary in a linear amplifier for single-sideband service can be provided most economically by a high-mu triode in a cathode-drive circuit. Because of its low input impedance, a cathode-driven amplifier does not require a tuned input circuit. And, because of the plate-cathode shielding provided by the grid, it usually does not require neutralization. Its low input impedance also makes it unnecessary to use "swamping" resistors to provide the constant driver loading required for good linearity. Although a cathode-driven amplifier requires more driving power than a grid-driven amplifier, most of the driving power appears as useful power in the output circuit, so that high overall efficiencies can be achieved. Additional economies can be achieved by the use of a triode which can be operated as a zero-bias class B amplifier.

Beam power tubes or tetrodes which can be operated as high-mu triodes make excellent linear amplifiers. They are especially useful in cathode-drive circuits, because of the excellent shielding provided by the two grids.

The RCA-7094 beam power tube has extremely good triode characteristics. It is particularly useful in cathode-drive service (1) because of its low plate-cathode capacitance and high perveance and (2) because it has an indirectly heated cathode and, therefore, does not require the use of filament chokes. As a class B linear amplifier in single-sideband service, a triode-connected 7094 with forced-air cooling can handle a peak-envelope-power input of 350 watts with only 1750 volts on the plate and zero bias on grids No. 1 and No. 2.

The circuit of the amplifier and power supply is shown in Figure 1. For illustrations of the layout and mechanical construction, see the photographs on pages 1, 3, and 4.

Note that although grids No. 1 and No. 2 of the 7094 are connected in parallel for rf through C_4, C_9, C_{10}, and C_{11}, the dc return for the input circuit is connected to grid No. 2. The grids are not connected in parallel for dc except when the meter switch (S_3) is in the plate-current position. This arrangement permits a single milliammeter connected in the ground side of the circuit to be used to measure either grid current or plate current without the hazard involved in switching the meter in and out of the high-voltage lead. It also minimizes the possibility of improper adjustments which would exist if the meter were used to measure only total cathode current.

A pi-network type, the output tank uses two tapped coils and a shorting-type bandswitching arrangement. L_2, the coil for the 10- and 15-meter bands, is wound of 3⁄16-inch copper tubing and has 9 turns spaced ¼ inch apart and an inside diameter of two inches. L_3, the loading inductance for the 20-, 40-, and 80-meter bands, consists of 23 turns of B & W type 3095-1 coil stock.

The positions of the taps were chosen to provide an operating Q of approximately 12 on all bands for a 50-ohm load. The 10-meter tap is approximately four turns from the tube end of L_2 and should be adjusted so that the plate-tuning capacitor (C_{15}) is almost fully open when the circuit is resonant at the high-frequency end of the 10-meter band. The 15-meter tap is connected to the junction between the two coils. The 20- and 40-meter taps are

Figure 1: Schematic diagram and parts list of W3FAL's linear amplifier and power supply.

C_1, C_2, C_3, C_4, C_7, C_8, C_9, C_{16}—0.01 µf, 600 v, disc ceramic
C_5, C_6, C_{10}, C_{11}—1000 µµf, 500 v, ceramic feedthrough
C_{12}—.0047 µf, 3000 v, disc ceramic
C_{13}—8 µf, 2000 v, oil filled
C_{14}—1000 µµf, 5000 v, ceramic standoff
C_{15}—11 to 100 µµf, variable (E. F. Johnson 100E30 or equiv.)
C_{17}—500 µµf, 5000 v, ceramic standoff
C_{18}—19 to 488 µµf, variable (E. F. Johnson 500E20 or equiv.)
F_1—5 amp fuse, 3AG type
F_2—1 amp "slo blo" fuse, 3AG type
L_1—1 turn, ½" ID (see text)
L_2—9 turns, 2" ID (see text)
L_3—23 turns from a Barker & Williamson 3905-1 coil or equiv.
L_4—8 henry, 250 ma filter choke (Thordarson 20C56 or equiv.)
M_1—0 to 300 ma meter (Triplett 327-PL or equiv.)
P_1, P_2—115 v pilot lamp assemblies
RFC_1—2.5 mh, 300 ma (National R300U or equiv.)
RFC_2—.225 mh, 800 ma (National R175A or equiv.)
R_1—1000 ohms, 2 watts, carbon
R_2—(3) 100 ohms, 2 watts, carbon (see text)
R_3—(2) 100,000 ohms, 50 watts, wire wound (connected in parallel)
S_1, S_2—SPST toggle switch
S_3—DPDT toggle switch
S_4—5 tap rotary switch, ceramic (Ohmite 111 or equiv.)
T_1—6.3 v, 4 amp filament transformer (Stancor P4019 or equiv.)
T_2—2.5 v, 10 amp filament transformer (Thordarson 21F02 or equiv.)
T_3—2065-0-2065 v ac, 1750 v dc at 200 ma plate transformer (Stancor PT8315 or equiv.)
Fan—small tube cooling motor and fan, 115 v ac

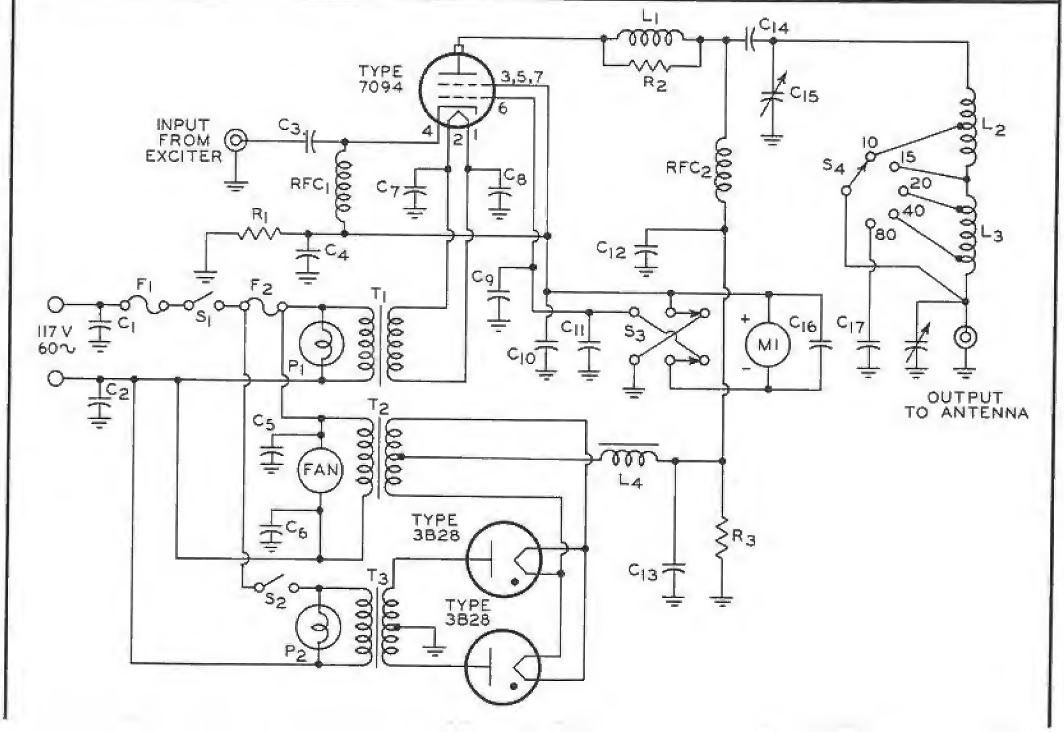

Rear view of the cathode-driven linear amplifier shows the rf enclosure and power supply components.

19 and 10 turns, respectively, from the output end of L_3. In the 80-meter position of the bandswitch, a 500-$\mu\mu$f fixed capacitor (C_{17}) is connected in parallel with the loading capacitor (C_{18}).

The meter is a single-scale, 0-300-milliampere type. A lower range meter and external shunt were not considered necessary because the normal grid current (80 milliamperes) and plate current (200 milliamperes) can easily be read on the same scale. The 1000-ohm resistor (R_1), connected between the positive side of the meter and ground, prevents high voltage from appearing at the cathode in the event of switch failure.

The power supply is a conventional full-wave type with choke-input filter. Type 3B28 gas rectifier tubes were used instead of 866-A's to eliminate the "hash" produced by the mercury-vapor types and to permit the amplifier to be operated on its side during tests and initial measurements. However, if you prefer, 866-A's may be used in place of the 3B28's without any changes in circuit values—provided the amplifier is always kept in a position such that the tubes are vertical.

The plate-power switch (S_2) is connected in series with the heater/filament-power switch (S_1) in such a manner that power cannot be applied to the rectifier plates until the filaments of the 3B28's and the heater of the 7094 have been energized. If 866-A mercury-vapor rectifiers are used, it will be necessary to delay application of plate power for at least 30 seconds after filament power has been turned on.

Construction

Because of the simplicity of the circuit, it was possible to construct the amplifier and power supply on a 12- by 17- by 3-inch chassis and a 10½- by 19-inch rack panel. The chassis is bolted directly to the panel and reinforced with 6½- by 11-inch chassis mounting brackets. The 7094 and plate-tank components are enclosed in a 7- by 12- by 9½-inch shield made of 18-gauge sheet aluminum. The front of this shield is mounted flush against the rack panel, and both are drilled for the shafts of the plate-tuning and loading capacitors and the bandswitch. Half-inch-wide flanges on the top and bottom of the shield provide good rf contact to the chassis and the perforated aluminum cover plate.

The small fan mounted on the back wall of the enclosure provides forced-air cooling for the 7094. Serving as the air inlet is a circular area of closely-spaced ⅛-inch holes, 3 inches in diameter. The holes are drilled in the wall behind the fan.

To minimize rf losses, all connections between the plate-tank circuit components, the bandswitch, and the 7094 are made of ¼-inch-wide copper strap. A 4-inch length of RG/8U coaxial cable is used for the connection between the loading capacitor and the output coaxial connector.

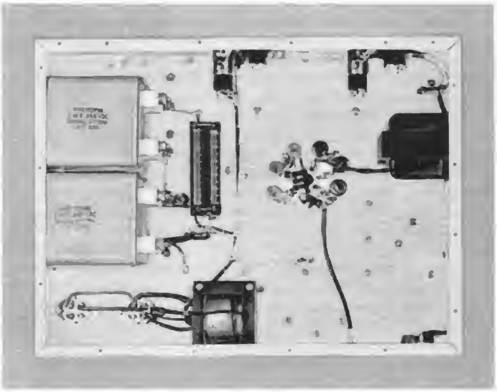

Looking at the underside of the amplifier chassis.

The parasitic suppressor in the plate lead (L_1) is a single turn of ⅜-inch-wide copper strap, ½ inch in diameter, shunted by three 100-ohm, 2-watt composition resistors connected in parallel.

The bypass capacitors for the meter (C_{10}, C_{11}, and C_{16}) and fan (C_5 and C_6) are feed-through types. They are installed at the points where the leads to these components pass through the chassis.

Because a single 8-μf capacitor (C_{13}) small enough to fit underneath the chassis was not available, four 2-μf capacitors were used (see the photograph of the chassis underside).

Tuning and Operating Adjustments

The amplifier requires a single-sideband exciter that can deliver a peak envelope power of approximately 15 watts. To tune the amplifier, connect it to the exciter and to a 50-ohm antenna-feed line or 200-watt, 50-ohm dummy load. Mesh the plates of the loading capacitor (C_{18}) to unload the tube, throw the meter switch to the "PLATE CURRENT" position, and then apply heater and plate voltage to the 7094. With no excitation applied, the plate current should be 35 to 40 milliamperes.

Switch the meter to read grid current, apply a single-tone modulating signal to the exciter, and quickly adjust the drive to the amplifier until the grid current of the 7094 is approximately 50 milliamperes. Then immediately switch the meter to read plate current and tune the plate tank for minimum current.

Reduce the loading capacitance, keeping the plate tank tuned, until the plate current is approximately 100 milliamperes. Increase the drive to obtain 80 milliamperes of grid current.

Adjust the loading and plate-tank tuning to obtain a resonant plate current of 200 milliamperes, keeping the grid current at 80 milliamperes.

When supplied with 15 watts of driving power and adjusted as described above, the amplifier delivers a peak envelope power of approximately 200 watts to the antenna. Third-order distortion products under these conditions are 35 db below the two-tone signal level. An exciter delivering less than 15 watts P.E.P. may be used, provided the loading for the 7094 is reduced sufficiently to maintain a 2.5-to-1 ratio between plate current and grid current.

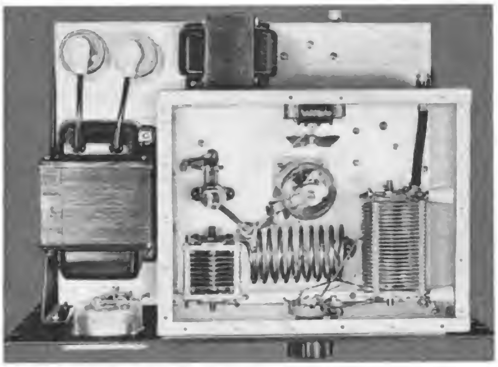

Here is a top view of the linear amplifier, with the rf enclosure cover removed.

From your local RCA distributor, headquarters for RCA receiving and power tubes.

RCA HAM TIPS is published by the RCA Electron Tube Division, Harrison, N. J. It is available free of charge from RCA distributors.

Harvey Slovik, Editor

DISTRIBUTED BY
CAMERADIO CO.
1121 PENN AVE.
PITTSBURGH 22, PA.

WHEN MAILING
PLACE POSTAGE HERE

FORM 3547 REQUESTED

HAM TIPS

A PUBLICATION OF THE RCA ELECTRON TUBE DIVISION

VOL. 20, NO. 1 ©1960, RADIO CORPORATION OF AMERICA JAN.-FEB., 1960

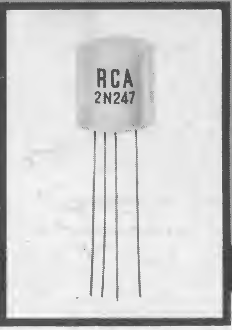

A TWO-TRANSISTOR REGENERATIVE RECEIVER

For 80 and 40 Meters

By E. M. Washburn, W2RG*

The operating enjoyment on 80, 40, and 15 meters provided by the transistorized QSO-getter described in my article for the July, 1957, issue of HAM TIPS prompted the construction of a companion transistor receiver.

It seemed desirable that the receiver be a superheterodyne, and literature was searched for a suitable circuit. Although several promising circuits were found, they all had the same shortcoming: they required more transistors and other components than would fit readily into a cabinet as small as the one used for the transmitter. The July, 1957, issue of QST, however, contained a description of a transistorized regenerative "reflex" receiver built by W6WXU. It seemed to provide the answer. This receiver used only two transistors (a 2N107 and a 2N170) and two 1N60 diodes, and was built in a case small enough to be held in the palm of one hand.

A breadboard receiver was constructed, using the basic circuit of W6WXU's receiver with modifications to suit the components on hand. Two RCA-2N247 p-n-p DRIFT FIELD transistors were used in place of the 2N107 and 2N170, the two diodes were changed to type 1N34's, and a B & W Type 3015 Miniductor was used as the antenna coil in place of the hand-wound ferrite-rod antenna used in the original. A small output transformer with primary and secondary connected in series was used instead of the 2-henry choke.

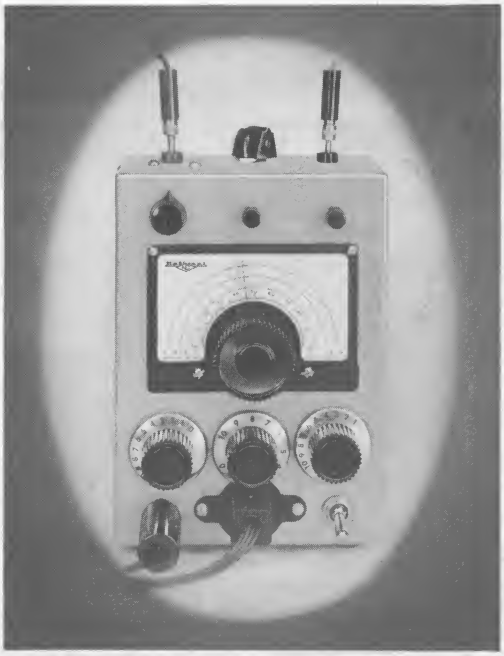

Front view of W2RG's receiver. The two transistors are mounted externally just above bandspread tuning dial.

This breadboard model worked so well that it was rebuilt in a 7- by 5- by 3-inch Minibox, as shown in the accompanying photographs. The receiver covers 3.3 to 8.5 Mc in three ranges which can be adjusted by means of the bandsetting capacitor to provide continuous coverage or separate bandspread coverage

---

*Manager (Retired), Frequency Control Engineering, RCA, Camden, N. J.

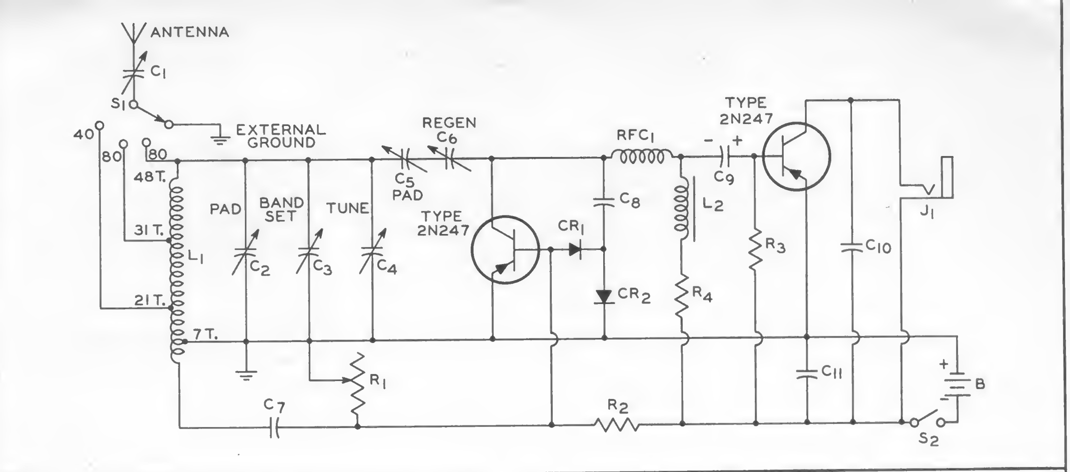

B_1—Battery, 6 volt, heavy duty (RCA-VS009 or equiv.)
C_1—0-50 $\mu\mu$f, variable
C_2—7-45 $\mu\mu$f, ceramic variable (Erie type N500 7-45 or equiv.)
C_3—0-75 $\mu\mu$f, variable
C_4—0-20 $\mu\mu$f, variable
C_5—1.5-7 $\mu\mu$f, ceramic variable (Erie type NPO 1.5-7 or equiv.)
C_6—0-50 $\mu\mu$f, variable
C_7—270 $\mu\mu$f, mica
C_8—220 $\mu\mu$f, mica
C_9—8 μf, electrolytic
C_{10}—0.01 μf, ceramic disc
C_{11}—0.01 μf, ceramic disc
CR_1, CR_2—Crystal diode, type 1N34 or equiv.
J_1—Phone jack, open circuit
L_1—48 turns, B & W Miniductor #3015, tapped as shown
L_2—AF choke, 2 henrys
R_1—Bias control, 10,000 ohm potentiometer
R_2—220,000 ohms, ¼ watt
R_3—270,000 ohms, ¼ watt
R_4—270 ohms, ½ watt
RFC_1—2.5 millihenrys, rf choke
S_1—Wafer switch, single-pole, four position
S_2—On-off switch, SPST

Figure 1: Schematic diagram and parts list of W2RG's two-transistor 40- and 80-meter receiver.

for the upper and lower halves of the 80-meter band and for the 40-meter band.

Circuit Description

The circuit of the receiver is shown in Figure 1. The rf section includes the antenna coil L_1; the padding, bandsetting, and tuning capacitors C_2, C_3, and C_4, respectively; the first type 2N247 transistor; the two crystal diodes, and the regeneration-control capacitors C_5 in series with C_6. The remaining components comprise the "reflex" and af-amplifier portions of the receiver. R_1 controls the bias on both transistors. According to the description of W6WXU's receiver in QST, the first transistor acts as a regenerative amplifier feeding the two series-connected crystal diodes. The af voltage appearing across the grounded diode is fed back to the first transistor (through the base), amplified, and reamplified in the second transistor. We have not questioned this very brief explanation because one thing is certain: the receiver works beautifully.

Construction Details

The arrangement of the major controls and components is shown on page 1 in the front view of the completed receiver. From left to right across the top of the cabinet are the antenna jack, band-selector switch (S_1), and ground-connection jack. Above the tuning dial are the antenna-trimmer capacitor C_1, and the two RCA-2N247 transistors. Just below the dial are the band-setting capacitor C_3, the transistor-bias control R_1, and the regeneration control C_6, and across the bottom are the phone jack, power-supply connector, and ON-OFF switch S_2.

The photographs on pages 2 and 3 show the internal construction. Hand-capacitance effects in tuning are eliminated by the National dial for the band-spread capacitor, and by the use of flexible couplings and bakelite extension shafts for the antenna-trimmer, band-setting, and regeneration-control capaci-

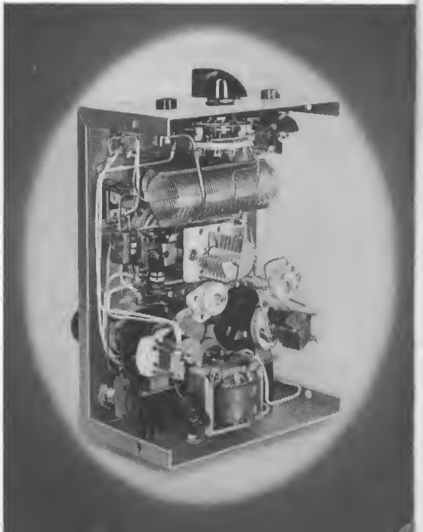

Inside view of the receiver, showing placement of major components.

tors. To assure mechanical stability, the antenna-trimmer, band-setting, and regeneration-control capacitors are rigidly mounted on brackets and stand-off insulators, and smaller components are supported by heavy bus-bar wire.

All 48 turns of the B & W Type 3015 Miniductor are used for the antenna coil, L_1. Turns adjacent to the two tap points and the ground connection are depressed to permit clean soldering of connections at these points without danger of shorted turns. The electrolytic capacitor, band switch, flexible couplings, and resistors shown in the photographs are larger than necessary, because I simply used whatever parts were at hand.

Operation

The only power supply needed for the receiver is a 6-volt battery, which may be the same as that used for the transmitter. Although an antenna may not be necessary, a good external ground connection is essential to eliminate phone-cord body-capacitance effects. If an antenna is used, it should be only a very short length of wire—not the transmitting antenna—and should be very loosely coupled to the antenna coil.

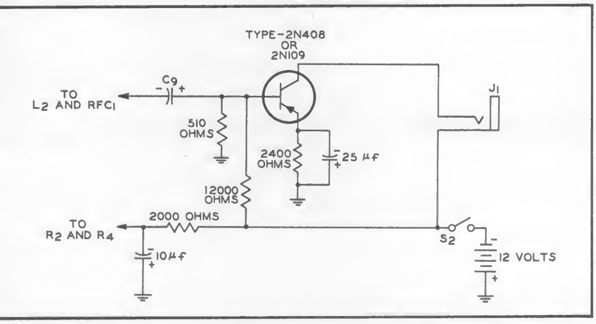

Figure 2: Modified output circuit for operation of W2RG's receiver with 12-volt dc supply.

The receiver performs best on CW signals. For most stable performance, the bias and regeneration controls should be advanced well beyond the threshold of oscillation. For very weak signals, it will be necessary to work closer to the oscillation point. For phone signals, as in any regenerative receiver, the regeneration control should be set just below the oscillation point. Weak phone signals, however, are difficult to copy.

High-resistance headphones should not be used with the receiver because they cause motor-boating and make it difficult to maintain smooth control of oscillation. Phones having a dc resistance of about 135 ohms, such as the Trimm Z-300, are satisfactory and provide plenty of volume on most ham signals, even with a 6-foot antenna.

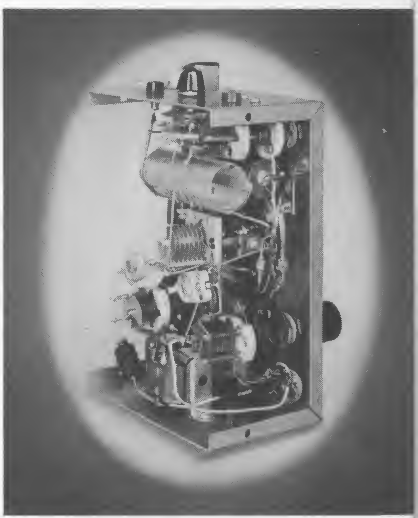

Inside view of the receiver, showing mounting of the two-crystal diodes.

To avoid burnout of the transistors, it is absolutely essential that the bandswitch be set in its "EXTERNAL GROUND" position before transmitting, and whenever the receiver is not being used. If even a moderately high-power transmitter is being used in the vicinity of the receiver, the receiving antenna should be disconnected.

When the receiver is first turned on, its tuning drifts slightly, and both the bias and regeneration controls may require readjustment. During transmitting periods, the receiver frequency tends to move upwards, so that when you turn it over to the other chap and throw the band-selector switch to either the 40- or 80-meter band, you have to retune slightly in the downward direction.

Nevertheless, the receiver has proved to be well worth the effort and expense that went into its construction. With its companion 300-milliwatt transistorized transmitter, it has provided many two-way QSO's over distances up to 1,000 miles, and many European ham stations on 40 meters have been copied during evening hours.

Modifications

If operation from a 12-volt battery is desired, the circuit should be modified as shown in Figure 2, and either an RCA-2N408 or -2N109 transistor used in place of the 2N247 in the output stage of the receiver.

From your local RCA distributor, headquarters for RCA receiving and power tubes.

RCA HAM TIPS is published by the RCA Electron Tube Division, Harrison, N. J. It is available free of charge from RCA distributors.

•

Harvey Slovik, Editor

IT'S ELECTRONICS
LL BARBEY'S FIRST

BLK. RT.

WHEN MAILING
PLACE POSTAGE HERE

READING
PA.
U.S. POSTAGE
02
PB METER 314629

GEORGE D. BARBEY CO., INC.
Reading Pottstown
Lancaster Lebanon

FORM 3547 REQUESTED

New RCA Beam-Deflection Tube... simplifies SSB!

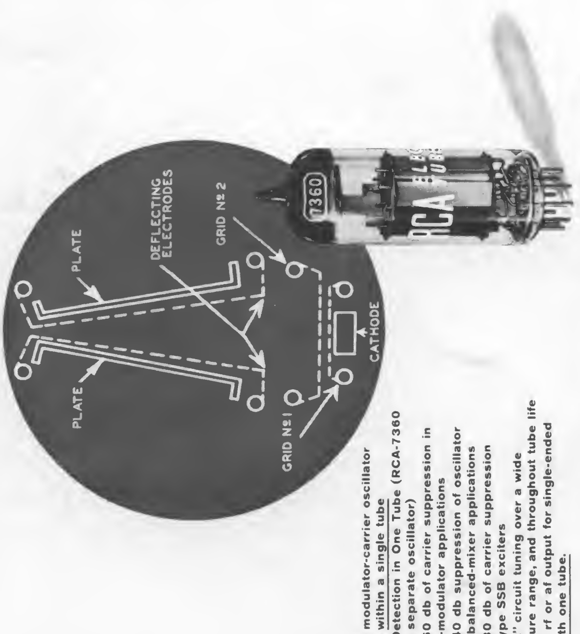

- Balanced modulator-carrier oscillator functions within a single tube
- Product-Detection in One Tube (RCA-7360 needs no separate oscillator)
- At least 60 db of carrier suppression in balanced-modulator applications
- At least 40 db suppression of oscillator signal in balanced-mixer applications
- At least 80 db of carrier suppression in filter type SSB exciters
- "Stay-put" circuit tuning over a wide temperature range, and throughout tube life
- Push-pull rf or af output for single-ended input—with one tube.

Specifically developed for SSB and DSB suppressed-carrier rigs, RCA-7360 is the small-but-mighty tube that can "double-up" on a number of exciter functions at frequencies up to 100 Mc. It simplifies circuitry—makes it practicable to use inexpensive components.

Here's how it operates! The cross-section shows the main elements of the RCA-7360. The single flat cathode, control grid, and screen grid form an electron gun which generates, controls, and accelerates a beam of electrons. The total plate current to the two plates (at a given plate voltage) is determined by the voltages applied to the control grid and the screen grid. This total plate current varies with the bias or signal voltage on the control grid as in any conventional tube. The division of the total plate current between the two plates is determined by the difference in voltage between the two deflecting electrodes.

RCA-7360's are now available at your RCA Industrial Tube Distributor. For a technical bulletin on RCA-7360, see your RCA Industrial Tube Distributor. Or write RCA, Commercial Engineering, Harrison, N. J.

RADIO CORPORATION OF AMERICA
Electron Tube Division *Harrison, N. J.*

ANOTHER RCA CONTRIBUTION TO COMMUNICATIONS

RCA
HAM TIPS
A PUBLICATION OF THE RCA ELECTRON TUBE DIVISION
VOL. 20, NO. 2 ©1960, RADIO CORPORATION OF AMERICA MAY, 1960

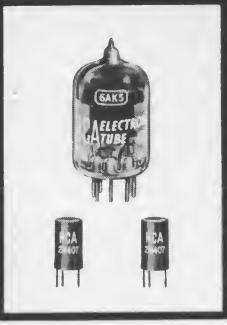

A Low-Cost, One-Tube Walkie-Talkie

With Transistorized Audio Stages

By Martin L. Kaiser, W2VCG

RCA Laboratories, Princeton, N. J.

Interested in small-sized, low-cost walkie-talkies? Then you may find the newly developed 28-megacycle unit described in this article especially suited to your requirements.

An outstanding feature of this walkie-talkie is its economy. Complete with tube, transistors, and batteries, cost of unit is less than \$30.

Evolved from numerous units constructed by the writer over the last decade, this walkie-talkie features a unique application of two RCA-2N407 germanium p-n-p alloy junction transistors in combination with an RCA-6AK5 sharp-cutoff pentode.

Under normal operating conditions, the walkie-talkie can achieve a range of about five miles; receiver sensitivity is ½ microvolt.

The 28-megacycle band was selected for the following reasons:

(1) Operation at 28 Mc permits use of a conveniently sized, easily portable antenna.

(2) On the crowded lower-frequency bands, QRM is difficult to overcome with only 1-watt output.

(3) At higher frequencies, coil placement and lead length are extremely critical, and special VHF construction procedures must be followed.

Receiver Circuit

As shown in Figure 1, a single 6AK5 tube is used in the circuits of both a superregenerative receiver and a modulated tri-tet oscillator in the transmitter. The circuit of the regenerative-type receiver is conventional.

Regeneration is obtained by feeding some of the signal from the plate coil (L_6) to the grid coil (L_4). The amount of regeneration is determined by the setting of R_{11}, a 100,000-ohm potentiometer; this control is set just below the point of oscillation. This point will vary with the frequency to which the receiver is tuned. The audio signal appears across the plate-load resistor (R_5) and the volume control (R_6) and is transferred through C_8 to the base of the 2N407 emitter-follower.

Figure 2 shows the chassis layout for all major components. After these components have been mounted, the 6AK5 socket and the TR (Transmit-Receive) switch are connected

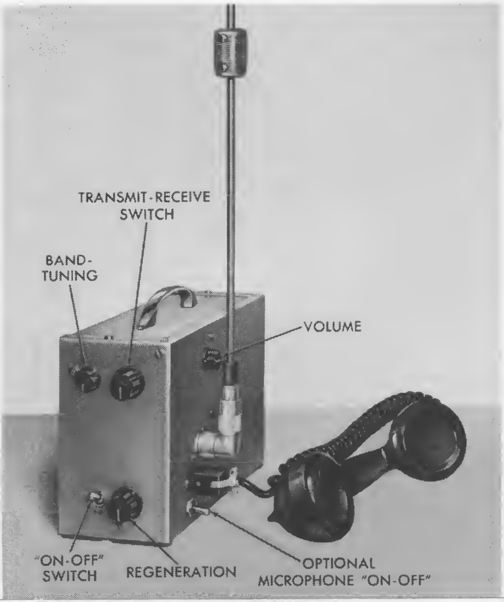

by a small cable consisting of five 4-inch wires. These wires must be connected to pins 1, 2, 4, 5, and 6 at the tube socket. Pins 2 and 7 are connected together at the socket; pin 3 is soldered to the copper support bracket. Leads carrying dc and audio frequencies are soldered to common terminals at the rear of the TR switch, while leads carrying radio frequencies (leads from pins 1, 5, and 6, for example) are soldered to common terminals of the switch nearest the tube.

After these leads are connected to the switch, all coils (L_1 through L_6) are mounted securely. Coil L_1 should be mounted close to the crystal and, together with L_2 and L_3, as far as possible from metal surfaces.

Coverage of C_2, the main band-tuning capacitor, can be determined experimentally. The combination shown in this unit will tune the 28.5-to-29.7 Mc portion of the band.

After L_4 is wound, the windings should be secured with coil "dope." Then, when the

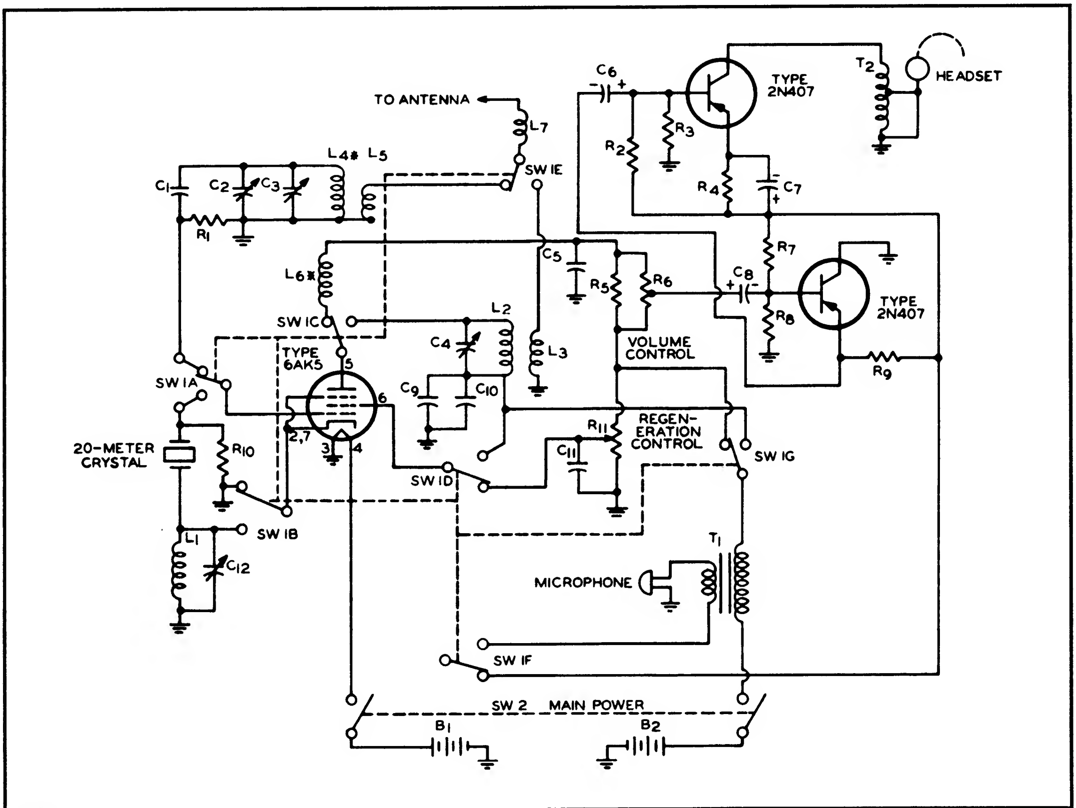

B_1—Two batteries (RCA VS065)
B_2—Two batteries (RCA VS016)
C_1—100 μμf, mica
C_2—Johnson 5M11
C_3, C_4, C_{12}—7-45 μμf (Centralab type 822-BN or equiv.)
C_5—0.005 μf, ceramic
C_6—2 μf/15 volts, electrolytic
C_7—100 μf/15 volts, electrolytic
C_8—4 μf/150 volts, electrolytic
C_9, C_{11}—0.001 μf, ceramic
C_{10}—470 μμf, mica
E and M—Standard telephone headset
L_1—½" inside diameter, 14 turns of No. 20 wire
L_2—½" inside diameter, 6 turns of No. 20 wire
L_3—½" inside diameter, 4 turns of No. 20 wire
L_4—⅝" inside diameter, 8 turns of No. 18 wire
L_5—½" inside diameter, 5 turns of No. 20 wire
L_6—3 turns of number 18 wire on L_4
L_7—¾" long 1" inside diameter, 12 turns of No. 20 wire
R_1—1,200,000 ohms, ½ watt
R_2, R_5—5,600 ohms, ½ watt
R_3, R_9—10,000 ohms, ½ watt
R_4—220 ohms, ½ watt
R_6, R_{11}—100,000-ohm, ½-watt potentiometer
R_7—47,000 ohms, ½ watt
R_8—270,000 ohms, ½ watt
R_{10}—30,000 ohms, ½ watt
$SW_{1A, B, C, D, E, F}$—rotary type, eight-pole, two-position
SW_2—toggle, DPST
T_1—Carbon microphone transformer (Stancor A-4713 or equiv.)
T_2—UTC-A25 transformer, see text
Xtal—20 meter; must fall in band when doubled.

Figure 1: Schematic diagram and parts list of W2VCG's one-tube walkie-talkie with transistorized audio stages.

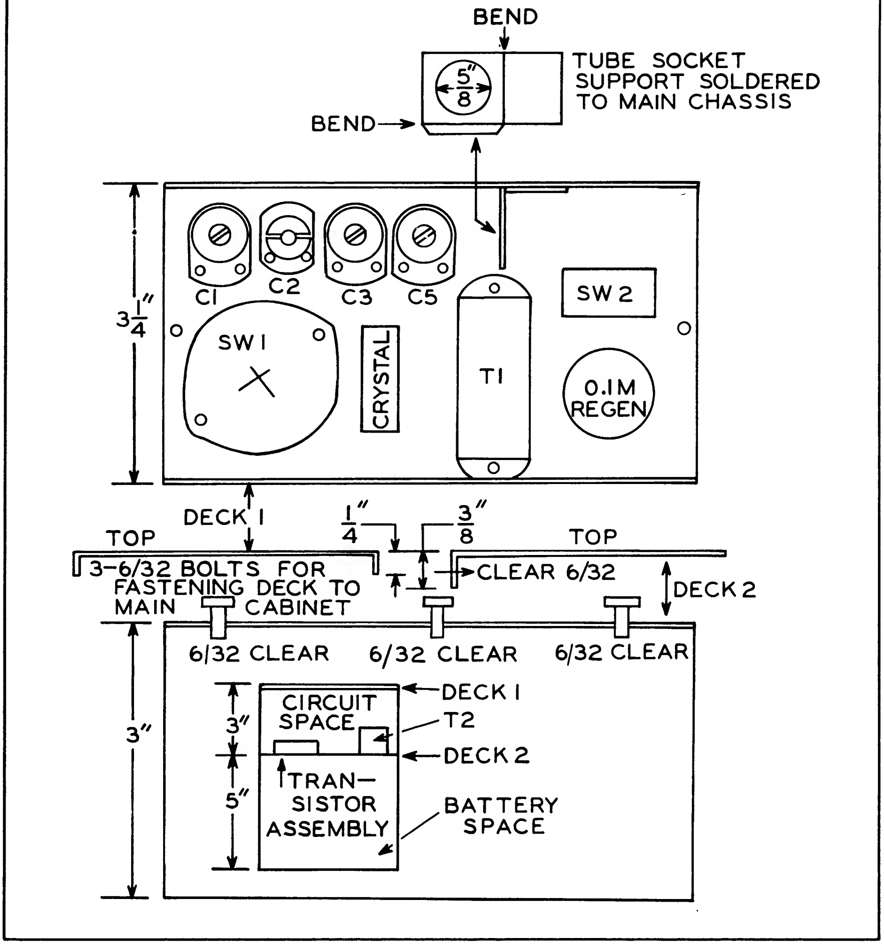

Figure 2: Chassis layout for all major components in author's walkie-talkie.

cement has dried, L_6 is wound in the same direction and on top of L_4 at the ground end. L_6 is cemented securely to L_4. When L_4 and L_6 are wired, the two outermost leads of the coil combination go to the grid and plate circuits of the 6AK5. The end of L_4 nearer L_6 should be grounded, and the other end connected to the grid circuit. The end of L_6 nearer the ground end of L_4 goes to the plate. If this wiring arrangement is not followed, the circuit will not operate.

Audio stages are wired on a separate subassembly, as shown in the photograph on page 5. The audio stages appear in the bottom left portion of the photo; the audio driver transformer is shown at the bottom right.

T_2 is a UTC-A25, although a similar transformer may be substituted. The UTC-A25 has a 600-ohm winding with multiple taps, one of which is 75 ohms. The 600-ohm winding closely matches the impedance of the 2N407 driver, and the 75-ohm tap closely matches the impedance of a standard telephone-headset earpiece. Voltages are fed to the emitters of the transistors and the collectors held at ground potential. This arrangement permits the telephone headset to be connected in the ground lead of the output transistor. The other 2N407 is an emitter-follower which drives the low-impedance base of the audio-output stage from the high-impedance output of the 6AK5. L_7 is wound with uniform spacing on the loading-coil form shown in the antenna diagram, Figure 3. It is then sprayed with a heavy layer of Krylon.

The volume control does not attenuate all the audio, but lowers it to a comfortable level. With the audio gain at maximum, there is sufficient drive to overcome practically all extraneous noise.

After the receiver is wired it should be tested and any necessary adjustment made before the transmitter circuit is wired. The battery drain during the "receive"cycle is 160 milliamperes for the A cells, and about 15 milliamperes for the B cells.

Transmitter Circuit

After the coils for the transmitter are connected, it is good practice during tuning to simulate the side of the chassis by placing a piece of sheet metal next to any coil which will come within 1 inch of the case. When wiring has been completed on the transmitter section, voltages and currents should be tested. The battery drain should average 200 milliamperes for the A cells and 18 milliamperes for the B cells.

With the TR switch in the transmit position, the 7.5-volt supply is placed across the primary of T_1, which is in series to ground through the 200-ohm microphone of the headset. This connection provides enough power transfer to modulate the unit fully. In the "receive" position, T_1 has no effect on the circuit, except to increase audio choking. The transmitter should be tuned with the aid of a grid-dip meter or some other type of rf detector. To make certain the unit is crystal-controlled, remove the crystal several times while watching rf output. The output should drop to zero when the crystal is removed. C_1 sets the excitation level for the crystal and is fixed at mid-range.

You need not stretch your imagination to find numerous occasions for the use of this novel walkie-talkie. In addition to providing many hours of pleasant entertainment, it can serve as a vital means of communication during emergencies.

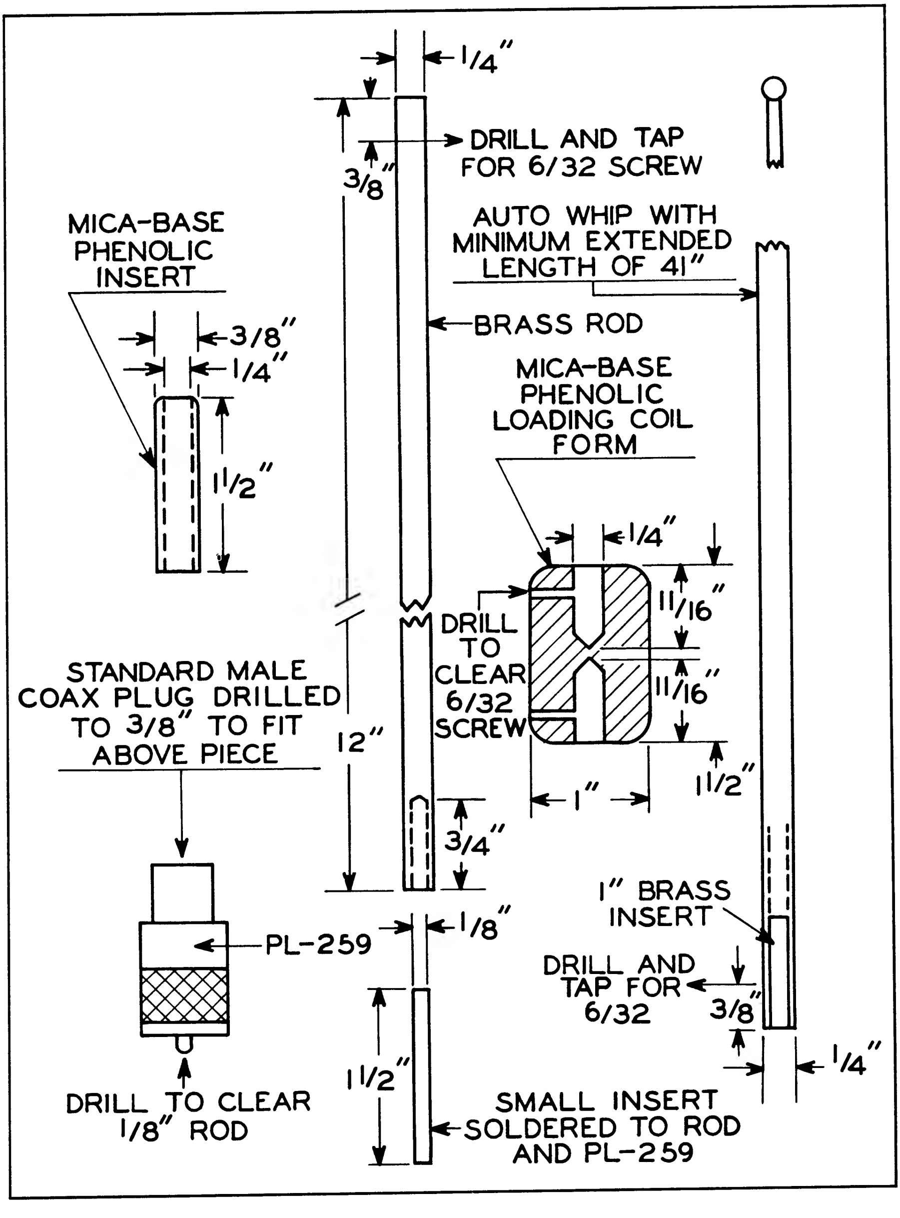

Figure 3: Antenna assembly.

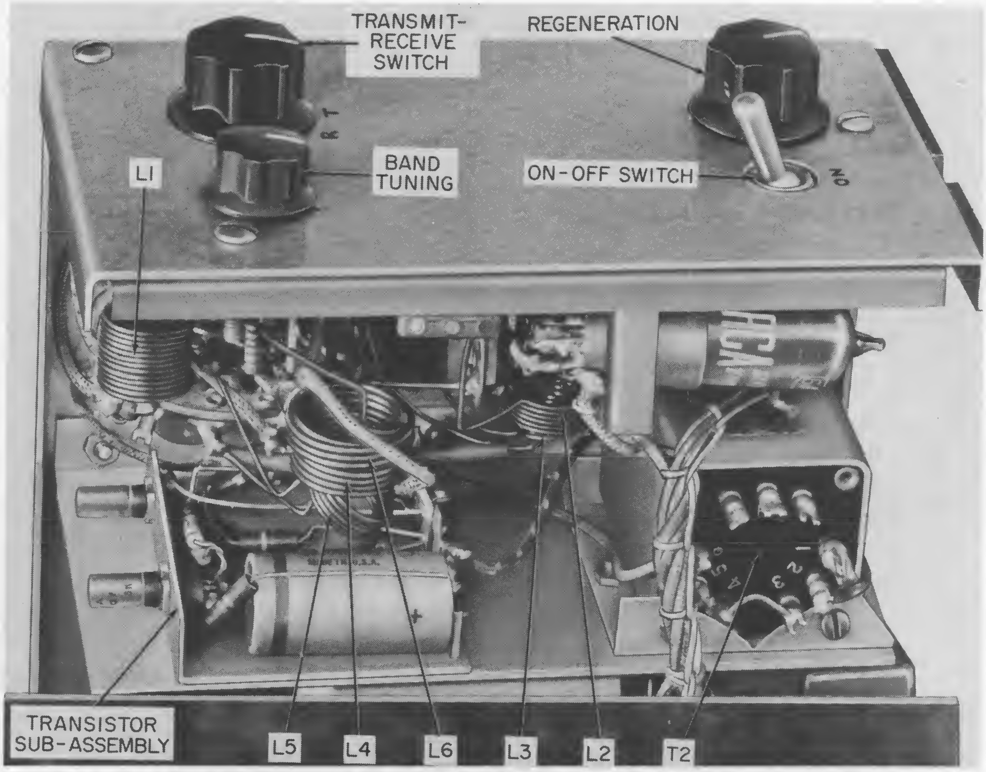

As noted in the text, W2VCG has wired the audio stages on a separate subassembly. This photo shows the audio stages at bottom left, the audio drive transformer at bottom right.

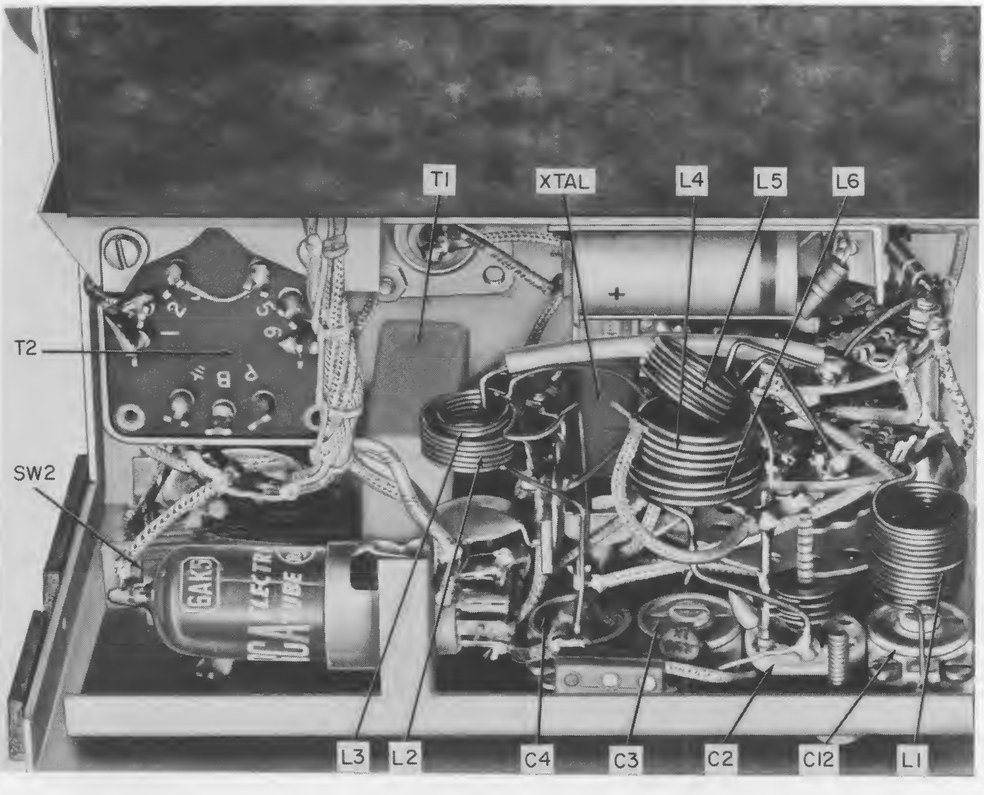

Inside view of walkie-talkie showing placement of components.

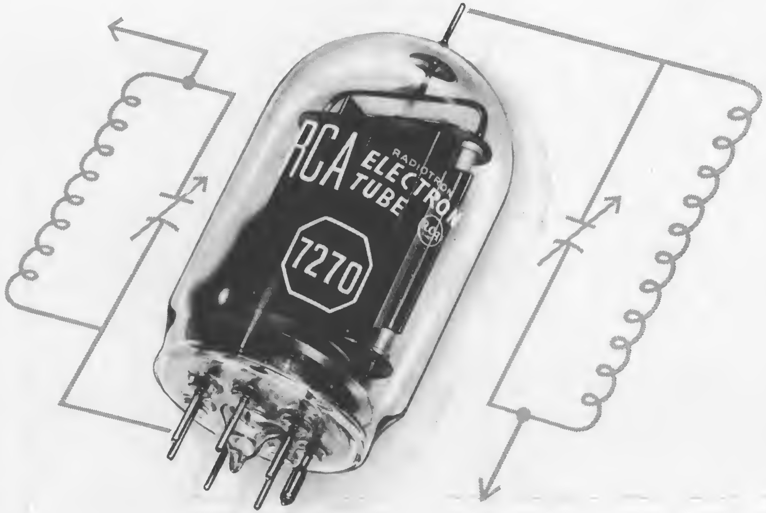

The FIRST High-Perveance "300-WATT" Input Beam Power Tube ...ever designed for Amateurs

- 315 watts CW input up to 60 Mc
- 235 watts CW input up to 175 Mc

Fix your eyes on this—one of the sweetest little beam power tubes ever designed and built for an amateur medium-power transmitter.

Here, in a compact unit no bigger than a child's fist, is an all-new tube that takes over *a quarter KW input to 2 meters.* High-perveance design—an original RCA development—enables you to get maximum power with a plate voltage of only 1350 volts. High power gain makes it easy to drive one RCA-7270 (or two in push-pull or parallel) with a single RCA-2E26 or -5763 through 10 meters—or a single 2E26 for 6- and 2-meter operation.

Check the chart for a quick appraisal of the RCA-7270's capabilities. For a complete technical bulletin on SSB, AM and CW use, qsl, RCA Commercial Engineering, Harrison, N. J.

Typical Operation in Amateur Service to 54 Mc

Type of Service	CW	AM	SSB (AB1)▲
Heater Volts	6.3	6.3	6.3
DC Plate Volts	1250	1000	1250
DC Grid No. 2 Volts	300	400	400
DC Grid No. 1 Volts	—80	—107	—50
DC Plate Ma	250	190	185*
Required Driver Power Output Watts (approx.)	4	4	4.5*
Useful Output Watts (approx.)●	225	130	135*

*Max. Signal Value ▲With Single-Tone Modulation
●Measured at load of output circuit having 90% efficiency

RADIO CORPORATION OF AMERICA
Electron Tube Division Harrison, N. J.

Another Example of RCA's Contribution to Amateur Radio

From your local RCA distributor, headquarters for RCA receiving and power tubes.

RCA HAM TIPS is published by the RCA Electron Tube Division, Harrison, N. J. It is available free of charge from RCA distributors.

•

Harvey Slovik, Editor
William Berce, Associate Editor

GEORGE D. BARBEY CO., INC.
Reading Pottstown
Lancaster Lebanon

FORM 3547 REQUESTED

WHEN MAILING
PLACE POSTAGE HERE

RCA
HAM TIPS
A PUBLICATION OF THE RCA ELECTRON TUBE DIVISION
VOL. 20, NO. 3

SEPTEMBER, 1960

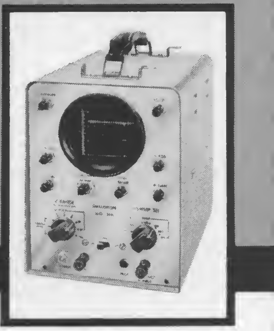

AN RF MODULATION MONITOR:

Modified RCA WO-33A 3-Inch Oscilloscope

By R. A. Rainboth, WV2LNQ, and J. F. Sterner, W2GQK

RCA Electron Tube Division, Bldg. 60, Camden, N. J.

RCA's new WO-33A 3-Inch Oscilloscope, which is available both as an easy-to-assemble kit and as a completely-wired, factory-calibrated instrument, has proved excellent for amateur radio use. Because of its plate coupling network (L-2 and R-33 in Figure 4), and the high sensitivity of the 3AQP1 cathode-ray oscillograph tube, the WO-33A is ideally suited for the application of rf signals to its vertical-deflection plates. The sensitivity of the 3AQP1 alone is such that 15 volts rms of rf signal provides at least one inch of deflection on the screen.

Frequencies below 4 Mc can be applied directly to the vertical input terminal of the WO-33A. A simple modification procedure permits monitoring of rf signals from 4 Mc to more than 150 Mc.

Essentially, as shown in Figure 2, this modification consists of adding a 0.01-μf ceramic disc capacitor (C-101) as a high-frequency bypass from cathode to ground, and a 0.005-μf ceramic disc capacitor (C-102) as a safety device to insure against excessive voltage being applied to the 3AQP1. A 4- to 40-$\mu\mu$f ceramic trimmer capacitor (C-103) is mounted on the rear of the WO-33A case for use as a gain control to provide fine adjustment of the rf carrier applied to the 3AQP1 vertical-deflection plates.

Figure 1: View of rear chassis.

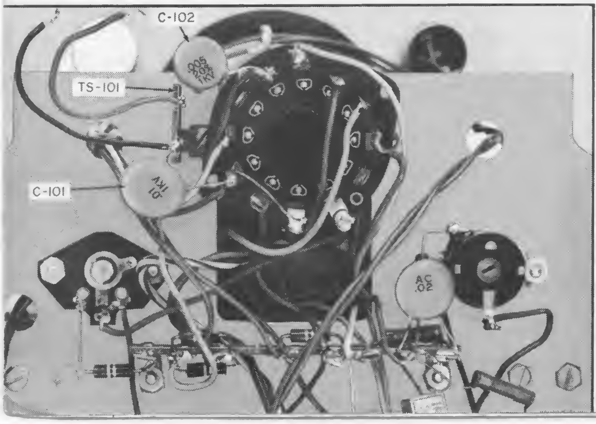

Specifically, the modification of the WO-33A as an rf modulation monitor consists of 14 steps, as follows:

(1) Carefully remove instrument from case.

(2) Install the two-lug terminal strip, TS-101, under the left-hand screw (as viewed from rear) holding the 3AQP1 support bracket. Position as shown in Figure 1.

(3) Connect C-101, the 0.01-μf disc capacitor, between lug #3 of the 3AQP1 and the grounded lug of TS-101 (attached to chassis). Solder the connection to lug #3 of the 3AQP1.

(4) Connect C-102, the 0.005-μf disc capacitor, between lug #6 of the 3AQP1 and the insulated lug of TS-101. Solder the connection to lug #6 of the 3AQP1.

(5) Connect one end of a 12-inch length of hookup wire to the grounded lug of TS-101. Solder.

(6) Connect one end of the other 12-inch length of hookup wire to the insulated lug of TS-101. Solder.

These six steps complete the modification to the chassis. As noted, all connections made

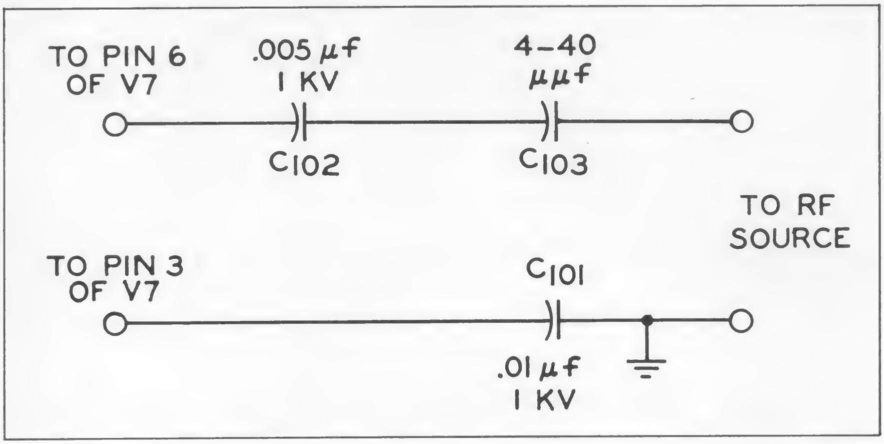

Figure 2: Circuit diagram for modification of WO-33A as an rf modulation monitor.

thus far should be soldered. Check the dress of the two capacitors to insure that the leads do not short against other wires or components. Then:

(7) Remove the knock-out plate on the rear of the WO-33A case.

(8) Locate and mark a point on the rear of the case 2$\frac{3}{8}''$ from the top, and 3$\frac{1}{4}''$ from either side (center). At this point, drill a $\frac{5}{32}''$ hole for inserting the TS-102 mounting screw.

(9) Mount the four-lug terminal strip (TS-102) on the rear of the case, as shown in Figure 3. Use the #6-32 screw, with the #6 lockwasher and #6 hex nut on the inside of the case.

(10) Replace the instrument in the case, passing the two wires connected to TS-101 through the knock-out hole.

(11) Cut the two wires so that they extend approximately 2 inches outside the case.

(12) Mount the 4- to 40-μμf trimmer capacitor (C-103) on the terminal strip TS-102 between lugs #2 and #4, as shown in Figure 3. (The grounded lug is designated as lug #1.)

(13) Connect the grounded hookup wire to the grounded lug of TS-102 (lug #1).

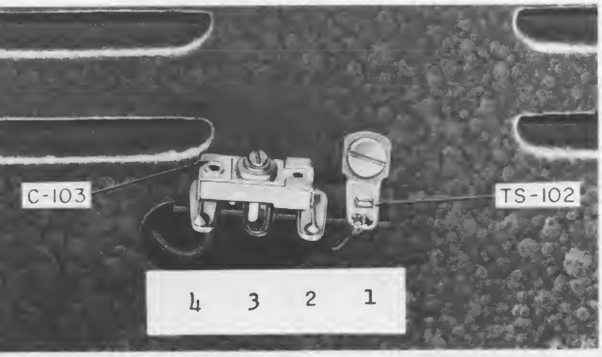

Figure 3: The four-lug terminal strip (TS-102) is mounted on the rear of the case.

(14) Connect the other hookup wire to lug #4 of TS-102. Solder lugs #1, #2, and #4 of TS-102. Be sure that good solder connections are made at the two lugs of the trimmer capacitor.

Coaxial cable or 300-ohm TV twinlead may be connected directly from an rf source to lugs #1 (ground) and #2 of terminal strip TS-102 on the rear of the WO-33A case. If coaxial cable is used, connect the braided shielding to lug #1, and the center conductor to lug #2 of TS-102.

When rf signals are applied directly to the vertical plates of the 3AQP1, the vertical input cable should be shorted out and the "Ver-

To modify RCA's WO-33A 3-Inch Oscilloscope for use in monitoring rf signals from 4 Mc to more than 150 Mc, only a few parts are needed, as follows:

- One C-101 (capacitor, ceramic disc, 0.01 μf, 1 kv)
- One C-102 (capacitor, ceramic disc, 0.005 μf, 1 kv)
- One C-103 (trimmer capacitor, ceramic, 4-40 μμf)
- One TS-101 (terminal strip, two lugs—with one grounded)
- One TS-102 (terminal strip, four lugs—with one grounded lug at end)
- One screw (6-32 x $\frac{1}{4}''$, pan head)
- One #6 internal tooth lockwasher
- One #6 hex nut
- Two insulated hookup wires (12″ length)

It is suggested that these two 12-inch lengths of hookup wire be of different color for identification purposes.

tical Range" switch set to position "60". The horizontal amplifier and sweep circuits may be adjusted in the normal manner to obtain modulation patterns as desired.

Normal operation of the WO-33A should not be affected by this modification. However, cables or leads connected to the terminal strip on the rear of the case must be removed before normal operation is resumed; otherwise, performance is affected by the added capacitance of these cables in the V-2 plate circuit.

For information concerning connections to the transmitter, interpretation of the 'scope pattern, and additional rf applications, radio amateurs should consult the ARRL Handbook or similar publications.

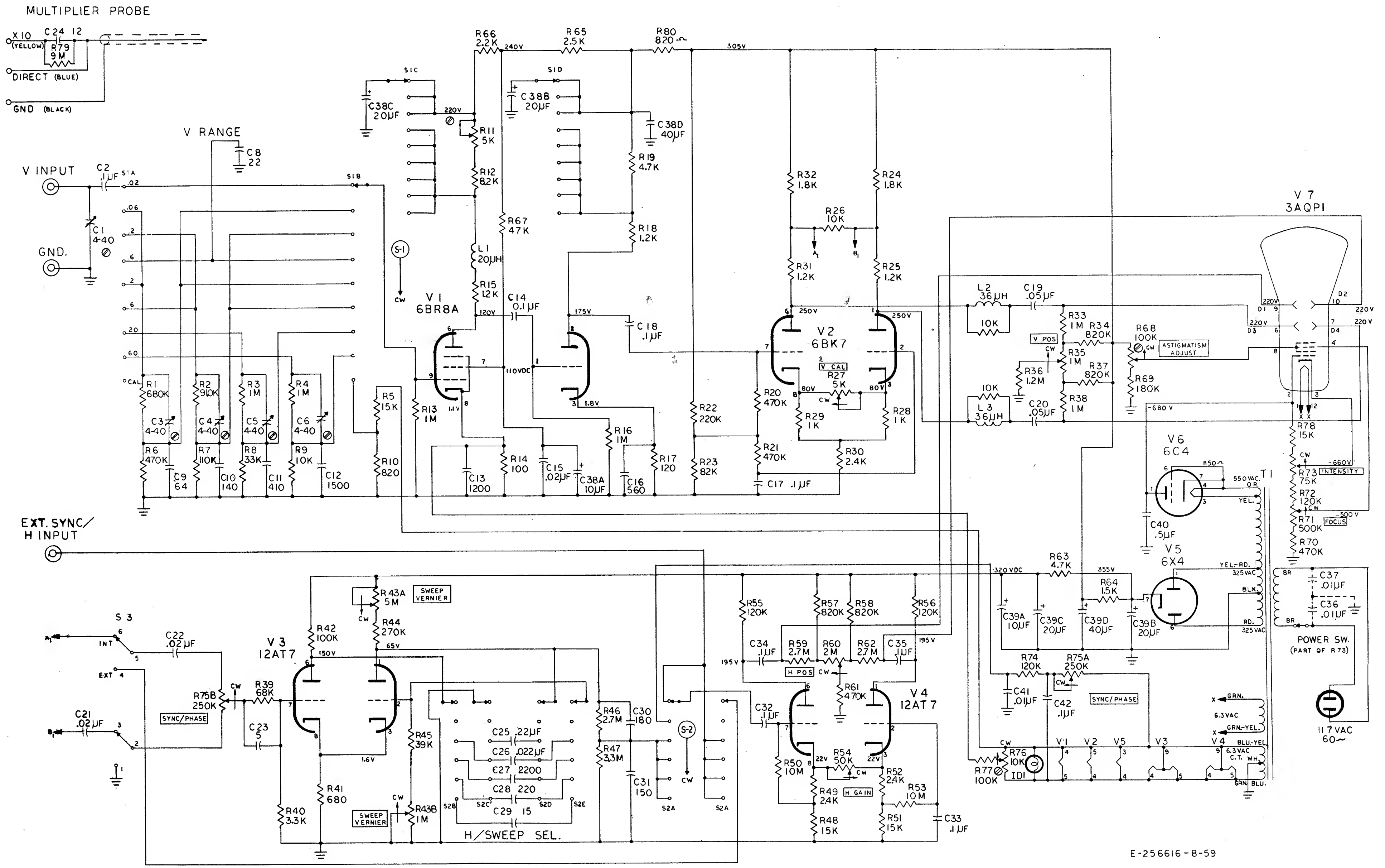

Figure 4: Schematic diagram of WO-33A and WO-33A(K).

NOTES

ALL CAPACITORS IN µµF, UNLESS OTHERWISE SPECIFIED.
ALL RESISTORS IN OHMS.
ALL VOLTAGES POSITIVE FROM GROUND, AND MEASURED WITH A VOLTOHMYST*
SWITCHES S-1 AND S-2 SHOWN IN MAXIMUM CCW POSITION
INSTRUMENTS WITH SERIAL NO.'S 1001 THRU 2300 HAVE TWO 0.01 µF DISC CAPACITORS BETWEEN THE AC LINE AND CASE GROUND

V RANGE FULL SCALE VOLTS (P-P) S-1

POSITION	RANGE	
1 (CCW MAX)	0.02	NARROW BAND
2	0.06	
3	0.2	
4	0.6	WIDE BAND
5	2.0	
6	6.0	
7	20	
8	60	
9	CAL.	

H/SWEEP SEL. SW. S-2

POSITION	RANGE	
1 (CCW MAX)	HOR. IN.	
2	LINE	
3	15-150	SWEEP
4	150-1500	
5	1500-15KC	
6	15KC-75KC	

SYNC. SW. S-3

POSITION	RANGE
RIGHT	EXT.
LEFT	INT.

* TRADE-MARK "VOLTOHMYST" REG. U.S. PAT. OFF.

HALF-KILOVOLT RF PROBE

By Joseph Talavage

RCA Semiconductor and Materials Division, Somerville, N. J.

A 500-volt rf probe, useful for obtaining the resonance point of transmitter tank circuits, grid circuits, and other high voltage rf circuits, can be easily constructed with readily available components and two silicon rectifiers. Figure 5 shows the simple schematic diagram for the probe.

RCA-1N1764 silicon rectifiers are used in the probe. Because these rectifiers have a peak inverse voltage of 500 volts each, the two connected in series permit the probe to be useful to peak voltages of 500 volts, or about 350 volts rms. The addition of more rectifiers raises the peak-voltage rating of the probe by 250 volts for each additional rectifier, a decided advantage over a typical crystal-diode rf probe which has a maximum operating voltage of about 28 volts peak.

Circuit operation is such that the dc output of the probe is proportional to the peak value of the input wave. For this reason, and because of the value selected for R_1, best accuracy is obtained when the input wave is sinusoidal.

An increase in the value of C_1 will extend the low-frequency response, but will also affect the accuracy of the reading. However, if C_1 is increased in value, the accuracy of the probe can be adjusted to an optimum value by means of compensating changes in the value of R_1.

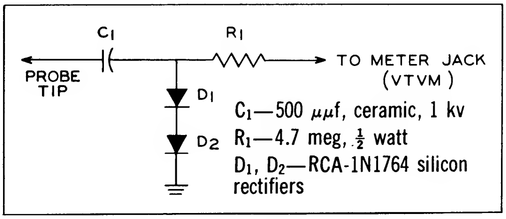

Figure 5: Simple schematic diagram and parts list of author's half-kv rf probe.

The probe circuit can be constructed to fit easily inside a discarded low-capacitance probe case. It was connected directly to an RCA WV-98A Senior *VoltOhmyst®*, through a shielded cable, and tested over a frequency range from 5 kilocycles to 50 megacycles, and a voltage range from 0.4 to 50 volts rms. Figures 6 and 7 show that for frequencies to 50 Mc, the greatest accuracy is obtained at voltages greater than 3 volts. The loading effect of the probe on resonant tank circuits was found to be negligible to at least 10 Mc.

Although all the tests were made with only one rectifier in the probe, the accuracy above 3 volts is relatively unaffected by the addition of the second rectifier.

Use of the probe involves a few simple steps: (1) place the selector switch of the VTVM in the "—DC" position; (2) apply the probe tip and ground wire to the correct points; and (3) read the *rms* value of the rf voltage on the appropriate dc scale.

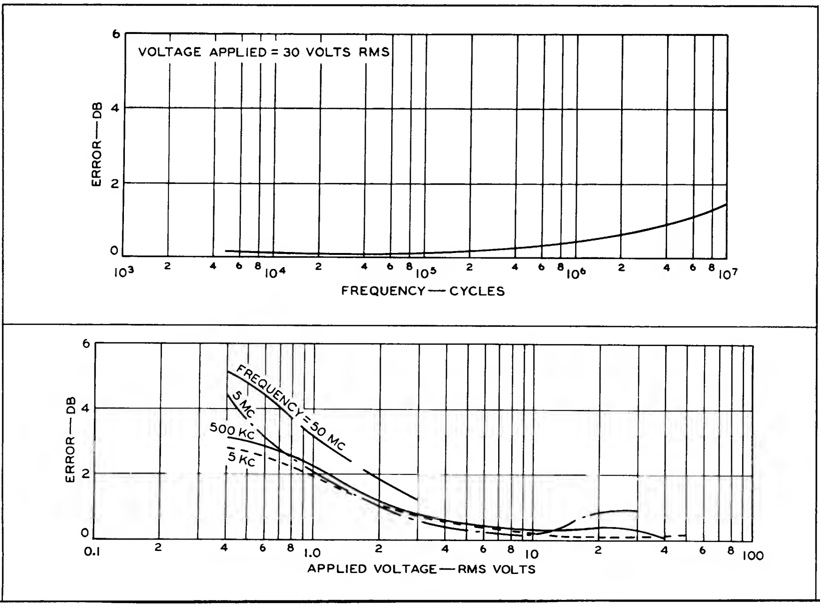

Figures 6 (top) and 7, as noted in text, show that for frequencies to 50 Mc, the greatest accuracy is obtained at voltages over 3 volts.

From your local RCA distributor, headquarters for RCA receiving and power tubes.

RCA HAM TIPS is published by the RCA Electron Tube Division, Harrison, N. J. It is available free of charge from RCA distributors.

•

Harvey Slovik, Editor

WHEN MAILING
PLACE POSTAGE HERE

READING PA.
P.B. METER
P.B. 314629
U.S. POSTAGE
02 ½

BLK. RT.

IF IT'S ELECTRONICS
CALL BARBEY'S FIRST

GEORGE D. BARBEY CO., INC.
Reading Pottstown
Lancaster Lebanon

FORM 3547 REQUESTED

90-WATTS MOBILE

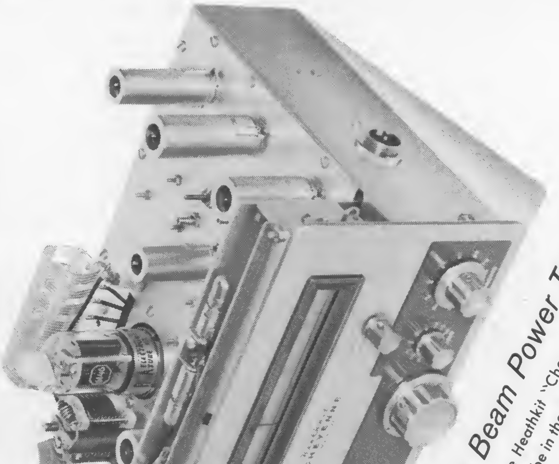

... with RCA Beam Power Tubes

You are looking at the Heathkit "Cheyenne". That's the popular RCA-6146 beam power tube in the final—and an RCA-5763 drives it on "all bands" from 10 to 80.

Why do smart designers choose beam power tubes? Beam power tubes help the transmitter man to shrink a rig down to more compact size. Beam power tubes banish "three-arm" operation—do the job with fewer stages, less expensive components, and fewer controls. Beam power rigs keep more of those transmitter dollars where you want them—in YOUR pocket!

Originator of beam power tube design, RCA is proud of the part these tubes have played in the progress of amateur radio.

Your RCA Industrial Tube Distributor is the man to see for RCA Beam Power Tubes. For technical data on any specific RCA Beam Power type, write RCA Electron Tube Division, Commercial Engineering, Harrison, N.J.

The Most Trusted Name in Electronics
RADIO CORPORATION OF AMERICA

HAM TIPS

A PUBLICATION OF THE RCA ELECTRON TUBE DIVISION

VOL. 20, NO. 4 © 1960, RADIO CORPORATION OF AMERICA DECEMBER, 1960

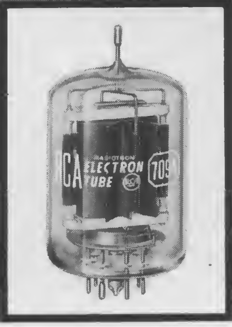

DETERMINATION OF TYPICAL OPERATING CONDITIONS

For RCA Tubes Used as Linear RF Power Amplifiers

Part I

By Claude E. Doner, W3FAL

RCA Electron Tube Division, Lancaster, Pa.

During the past few years, ham interest in single-sideband transmission has been on a continual upswing. As a result, numerous articles have been published on the theory and construction of linear triode and tetrode amplifiers. While these articles have discussed classes of tube operation and compared grid-drive to cathode-drive circuits, only a handful provided design information for adapting tube manufacturers' data to available components or to the amateur's specific requirements.

Included among the "selected few" was an article by A. P. Sweet, which appeared in the December, 1954, issue of HAM TIPS. It presented such information in the form of step-by-step calculations for use in converting published maximum ratings to typical operating conditions.

Now, six years later, having recognized the need to bring this design information up to date, HAM TIPS is pleased to offer here Part I of a two-part article prepared by W3FAL. This first part extends the calculations to include cathode-drive (grounded-grid) operation of tetrodes and triodes in class AB$_1$ service.

In the next issue, Part II will cover the procedure for calculating typical operating conditions for class B operation of triodes or triode-connected tetrodes in a cathode-drive circuit.

Sample calculations are based on published data and curves for the RCA-7094 power tetrode. Also included is a chart which lists maximum ratings and typical operating conditions for several widely used RCA power tubes.

Class AB$_1$ Operation of Tetrodes (Grid-Drive Circuit)

When it is desirable to operate tubes at conditions other than those given in the published data, typical operating conditions can be calculated from the maximum ratings and characteristics curves. The calculations required for class AB$_1$ operation of a tetrode in grid-drive service are given below. This procedure may be adapted to triode tube types by eliminating the terms E_{c2}, I_{c2}, i'_{c2}, and SI from the calculations.

(1) Make sure that E_b is within maximum ratings. (E_b is one of 21 symbols defined on page 2.)

(2) On the average plate-characteristics

curves, select a point near the "knee" of the curve for zero control-grid voltage; record i'_b and e_{bmin}. From the average screen-grid characteristics curves, determine i'_{c2} for this point; record E_{c2} for the curves used.

(3) Calculate I_{bms}: $I_{bms} = i'_b/3$.

(4) Calculate PD: $PD = (I_{bms}/4)\ (E_b + 3\ e_{bmin})$.

(5) Calculate SI: $SI = E_{c2} i'_{c2}/4$.

(6) Calculate PI: $PI = E_b I_{bms}$.

(7) Check the values obtained in steps 3 through 6 to determine whether they are within tube ratings. If either I_{bms}, PI, or PD is out of ratings, select a point slightly lower than the original point on the knee of the curve for zero control-grid voltage and recalculate steps 2 through 6. If only SI is out of ratings, select a point slightly higher on the knee. If SI and either I_{bms}, PI, or PD are out of ratings, select a lower value of i'_b (either in the negative-control-grid region or at a lower screen-grid voltage) and repeat steps 2 through 6.

E_b	*DC plate voltage (with respect to cathode)*
e_{bmin}	*Minimum plate voltage necessary to produce the required peak current (from the characteristics curves)*
E_{c2}	*DC screen-grid voltage*
E_{c1}	*DC control-grid voltage*
e_{cm}	*Maximum control-grid drive voltage needed to obtain the required peak plate current at a given minimum plate voltage*
E'_g	*Peak value of control-grid voltage swing*
I_{bms}	*Maximum signal, dc plate current*
I_{bo}	*Zero-signal, dc plate current*
i'_b	*Instantaneous peak plate current*
I_{c1}	*Maximum-signal, dc control-grid current*
I_{c2}	*Maximum-signal, dc screen-grid current*
i'_{c1}	*Instantaneous peak control-grid current*
i'_{c2}	*Instantaneous peak screen-grid current*
PD	*Plate dissipation at maximum signal*
PD_o	*Plate dissipation at zero signal*
PI	*Plate power input at maximum signal*
PO	*Power output at maximum signal*
P_{ft}	*Feed-through power at maximum signal (cathode-drive operation)*
DP	*Driving power at maximum signal*
SI	*Screen-grid input at maximum signal*
R_p	*Effective rf plate-load resistance*

(8) Calculate PO: $PO = PI - PD$.

(9) Calculate I_{bo}: $I_{bo} = I_{bms}/5$.

(10) Determine E_{c1} from the plate-characteristics curves as the control-grid voltage at which the plate voltage is E_b and the plate current is I_{bo}.

(11) Calculate E'_g: $E'_g = |E_{c1}| + e_{cm}$. This value of E'_g is equal to the absolute value of E_{c1} (the straight lines around this term indicate that its plus or minus sign may be ignored) plus the algebraic value of e_{cm} (include the sign). If the point selected in step 2 was on the curve for zero control-grid voltage, then e_{cm} is equal to zero and $E'_g = |E_{c1}|$.

(12) Calculate I_{c2}: $I_{c2} = i'_{c2}/4$.

(13) Calculate DP: $DP = E'_g i'_{c1}/4$. (For AB_1 operation, i'_{c1} equals zero; therefore, DP is also zero.) This value of DP does not include rf tube and circuit losses. The power available from the driver, therefore, should be at least 10 times this value in grid-drive operation. Because AB_1 tube driving power is zero, determine the approximate driver-output requirements from published AB_2 typical operating conditions at approximately the same E'_g and operating frequency.

(14) Calculate R_p: $R_p = E_b/1.7\ I_{bms}$.

* * *

Example—The following example illustrates the calculation of typical operating conditions for class AB_1 tetrode operation of the RCA-7094 in a grid-drive circuit:

(1) The maximum plate voltage rating is 2000 volts.

(2) From the plate-characteristics curves shown in Figure 1 ($E_{c2} = 350$ volts), select a point PI on the knee of the curve for zero control-grid voltage. At this point, i'_b is 0.650 ampere and e_{bmin} is 300 volts. At the corresponding point on the grid-characteristics curves shown in Figure 2, i'_{c2} is equal to 0.085 ampere.

(3) $I_{bms} = i'_b/3 = 0.217$ ampere.

(4) $PD = (I_{bms}/4)\ (E_b + 3\ e_{bmin}) = (0.217/4)\ [2000 + 3\ (300)] = 157$ watts.

(5) $SI = E_{c2} i'_{c2}/4 = (350)\ (0.085)/4 = 7.4$ watts.

(6) $PI = E_b I_{bms} = (2000)\ (0.217) = 434$ watts.

Table I: Ratings and operating conditions for RCA tubes used as linear rf power amplifiers.

Maximum Ratings—Absolute Values											Typical Operation									
Tube Type	Class of Operation	Service	Plate Voltage (E_b)	Grid-No. 2 Voltage (E_{c2})	Max-Signal Plate Current (I_{bms})—*ma*	Max-Signal Plate Input (PI)—*watts*	Max-Signal Grid-No. 2 Input (SI)—*watts*	Max.-Signal Grid-No. 1 + Grid-No. 2 Current ($I_{c1} + I_{c2}$)—*ma*	Plate Dissipation (PD)—*watts*	Grid-No. 1 Resistance—*ohms*	Plate Voltage (E_b)	Grid-No. 2 Voltage (E_{c2})	Grid-No. 1 Voltage (E_{c1})	Peak Grid-No. 1 Voltage (E'_g)	Zero-Signal Plate Current (I_{bo})—*ma*	Max-Signal Plate Current (I_{bms})—*ma*	Max-Signal Grid-No. 2 Current (I_{c2})—*ma*	Max.-Signal Grid-No. 1 + Grid-No. 2 Current ($I_{c1}+I_{c2}$)—*ma*	Drive Power (DP)-*watts*	Max-Signal Power Output (PO)—*watts*
2E26	AB$_1$	CCS	400	200	75	30	2.5		10	30 K	400	200	−25	25	9	45	10			12
		ICAS	500	200	75	37.5	2.5		12.5	30 K	500	200	−25	25	9	45	10			15
	AB$_2$	CCS	400	200	75	30	2.5		10		400	125	−15	30	10	75	16		0.2	20
		ICAS	500	200	75	37.5	2.5		12.5		500	125	−15	30	11	75	16		0.2	25
4-65A	AB$_1$										1000	500	−85	85	15	85	12			40
		CCS	3000	600	150		10		65	250 K	1500	500	−85	85	15	90	7			70
											1750	500	−90	90	10	85	9			85
	AB$_2$										1000	250	−30	105	30	150	22		2.5	85
		CCS	3000	600	150		10		65		1500	250	−35	100	30	125	15		1.5	125
											1800	250	−35	90	25	110	13		1.0	135
4-125A	AB$_1$										1500	600	−90	90	30	110	9			80
		CCS	3000	600	225		20		125	250 K	2000	600	−94	94	25	120	3			115
											2500	600	−96	96	25	115	4			165
	AB$_2$										1500	350	−41	141	44	200	17		5.0	175
		CCS	3000	400	225		20		125		2000	350	−45	105	36	150	3		3.0	175
											2500	350	−43	139	47	130	3		2.5	200
4-250A	AB$_1$										2000	500	−88	88	55	200	11			230
		CCS	4000	600	350		35		250		2500	500	−90	90	60	215	7			310
											3000	500	−93	93	60	205	5			370
	AB$_2$										2000	300	−48	100	60	255	13		5.5	325
		CCS	4000	600	350		35		250		2500	300	−51	100	60	250	12		5.0	420
											3000	300	−53	100	62	236	16		4.5	520
807 1625	AB$_1$										500	300	−32	32	22	70	8			23
		CCS	600	300	120	60	3.5		25	100 K	600	300	−34	34	18	70	8			28
		ICAS	750	300	120	90	3.5		30	100 K	750	300	−35	35	15	70	8			35
	AB$_2$										500	300	−30	43	30	120	10		0.2	38
		CCS	600	300	120	60	3.5		25		600	300	−32	40	24	100	9		0.1	40
		ICAS	750	300	120	90	3.5		30		750	300	−35	48	15	120	10		0.2	60
811A	B										750		0	100	16	175			10	90
		CCS	1250		175	165			45		1250		0	78	25	130			4	120
											1000		0	93	22	175			7.5	125
		ICAS	1500		175	235			65		1250		0	88	27	175			6	155
813	AB$_1$										2000	750	−90	80	25	130	20			165
		CCS	2250	1100	180	360	22		100		2250	750	−95	85	25	125	26			190
		ICAS	2500	1100	225	450	22		125		2500	750	−95	90	25	145	27			245
829B Natural Cooling	AB$_1$										500	200	−20	40	20	100	20			35
		CCS	750	225	250	100	7		30	100 K	600	200	−18	36	40	100	18			44
		ICAS	750	225	250	120	7		40	100 K	750	200	−21	42	20	100	20			55
	AB$_2$										500	200	−18	50	30	180	26		0.6	60
		CCS	750	225	250	100	7		30		600	200	−20	50	26	155	22		0.4	65
		ICAS	750	225	250	120	7		40		750	200	−19	50	32	160	25		0.5	85
832A	AB$_1$										500	180	−30	60	14	70	7			22
		CCS	750	250	90	36	5		15	100 K	600	150	−30	60	12	60	7			23
		ICAS	750	250	115	50	5		20	100 K	750	150	−32	64	12	60	7			30
833A	B	ICAS	3300		500	1300			350		3300		−80	190	60	300			20	710
6146 6159	AB$_1$										400	190	−40	40	32	114	13			27
		CCS	600	250	125	60	3		20	100 K	500	185	−40	40	29	108	13			35
											600	180	−45	45	13	100	12			40
											600	200	−50	50	14	115	14			47
		ICAS	750	250	135	85	3		25	100 K	750	195	−50	50	12	110	13			60
	AB$_2$										400	175	−41	48	17	116	9		0.2	31
		CCS	600	250	125	60	3		20		500	175	−44	51	14	121	9		0.3	41
											600	165	−44	49	11	104	9		0.2	45
											600	190	−48	55	14	135	10		0.3	55
		ICAS	750	250	135	85	3		25		750	165	−46	54	11	120	10		0.4	65
6524	AB$_2$										400	200	−23	72	25	145	10		0.1	39
		CCS	500	300	150	70	3		20	30 K	500	200	−26	70	20	116	10		0.1	40
											500	200	−25	76	25	145	10		0.1	50
		ICAS	600	300	150	85	3		20	30 K	600	200	−26	76	21	135	13		0.1	57
7094	AB$_1$	CCS	1500	400	350	300	20		100	30 K	1500	400	−65	60	30	200	35		4	185
		ICAS	2000	400	350	400	20		125	30 K	2000	400	−65	60	30	200	35		4	250
	B*	CCS	1500		350	300		200	100		1350	0	0	50	30	200		140	15	160
		ICAS	2000		350	400		200	125		1750	0	0	50	44	200		140	15	210
7580	AB$_1$	CCS	2000	500	350●		12		250	25 K	2000	400	−77	77	70	225	35		1	400●●

*Triode-connected cathode-drive operation

● During short periods of circuit adjustment under "single-tone" conditions, the average plate current may be as high as 350 ma.

●● Peak envelope power

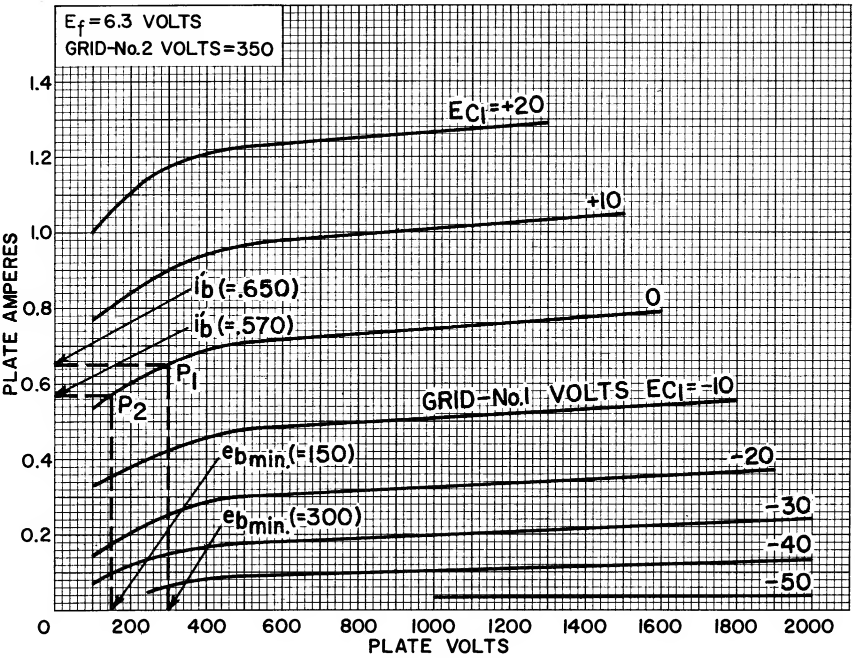

Figure 1: Typical plate characteristics of type 7094.

(7) Because both PD and PI are above the maximum ratings for the 7094, a lower value of i'_b must be used. Select a point P2 below the original point on the knee of the curve for zero control-grid voltage and recalculate steps 2 through 6.

At the new point, i'_b is 0.570 ampere and e_{bmin} is 150 volts. At this point on the grid-

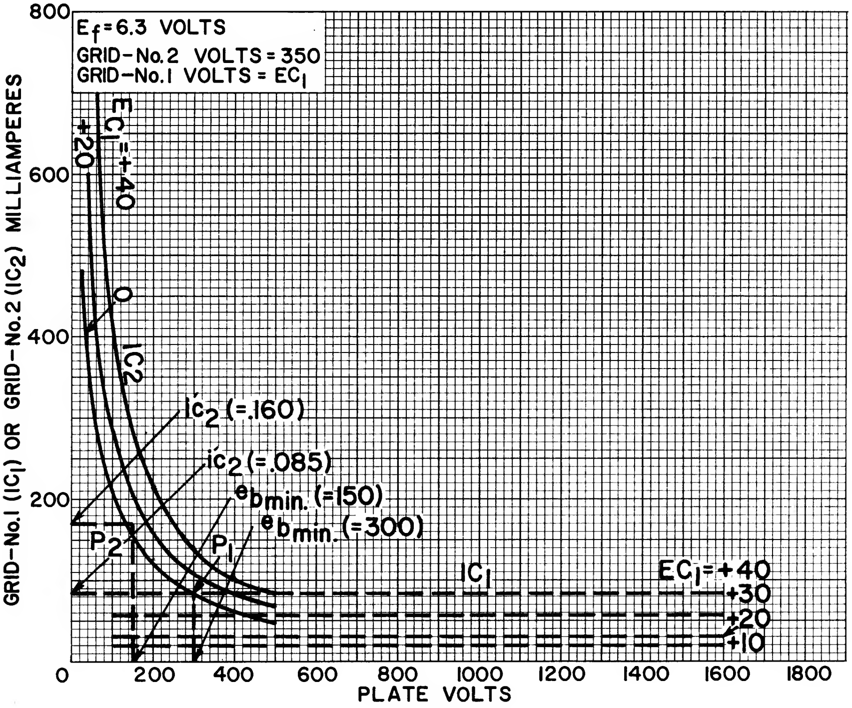

Figure 2: Typical characteristics for type 7094.

characteristics curves, i'_{c2} is 0.160 ampere.

$I_{bms} = 0.570/3 = 0.190$ ampere.

$PD = (0.190/4)\ [2000 + 3\ (150)] = 116$ watts.

$SI = (350)\ (0.160)/4 = 14$ watts.

$PI = (2000)\ (0.190) = 380$ watts.

All values in steps 3 through 6 are now within maximum ratings, and the calculations may be continued.

(8) $PO = PI - PD = 380 - 116 = 264$ watts.

(9) $I_{bo} = I_{bms}/5 = 0.190/5 = 0.038$ ampere.

(10) E_{c1} can now be determined from the plate-characteristics curves as the control-grid voltage at which the plate voltage is 2000 volts and the plate current is 0.038 ampere; $E_{c1} = -50$ volts.

(11) $E'_g = |E_{c1}| + e_{cm} = 50 + 0 = 50$ volts.

(12) $I_{c2} = i'_{c2}/4 = 0.160/4 = 0.040$ ampere.

(13) $DP = E'_g i'_{c1}/2 = (60)\ (0)/2 = 0$.

A suitable value of driving power can be determined from Table I. For the 7094 in ICAS AB_1 service, a typical value of 4 watts is listed.

(14) $R_p = E_b/1.7\ I_{bms} \doteq 2000/\ (1.7 \times 0.190) = 6200$ ohms.

* * *

Table I shows the maximum ratings and typical operating conditions for several popular RCA tubes in linear rf amplifier service for single-sideband, suppressed-carrier service.

It should be remembered that the typical operating conditions shown by the manufacturer (or calculated by the preceding methods) are only approximate. Minor adjustments are usually made in actual operation by slight variation of the control-grid bias or screen-grid voltage. In linear rf amplifier circuits for single-sideband, suppressed-carrier transmission, it is particularly important to check the actual operating conditions when the transmitter is first set up to assure that linear operation within the maximum tube ratings is being obtained.

From your local RCA distributor, headquarters for RCA receiving and power tubes.

RCA HAM TIPS is published by the RCA Electron Tube Division, Harrison, N. J. It is available free of charge from RCA distributors.

•

Harvey Slovik, Editor

GEORGE D. BARBEY CO., INC.
Reading Pottstown
Lancaster Lebanon

WHEN MAILING
PLACE POSTAGE HERE

FORM 3547 REQUESTED

HAM TIPS

A PUBLICATION OF THE RCA ELECTRON TUBE DIVISION

VOL. 21, NO. 1 FEBRUARY, 1961

DETERMINATION OF TYPICAL OPERATING CONDITIONS

For RCA Tubes Used as Linear RF Power Amplifiers

Part II

By Claude E. Doner, W3FAL

RCA Electron Tube Division, Lancaster, Pa.

As noted in the last issue (December, 1960), ham interest in single-sideband transmission has been on a continual upswing during the past few years. This interest has prompted publication of numerous articles on the theory and construction of linear triode and tetrode amplifiers. While these articles have discussed classes of tube operation and compared grid-drive to cathode-drive circuits, only a handful provided design information for adapting tube manufacturers' data to available components or to the amateur's specific requirements.

Included among the "selected few" was an article by A. P. Sweet, which appeared in the December, 1954, issue of HAM TIPS. It presented such information in the form of step-by-step calculations for use in converting published maximum ratings to typical operating conditions.

Having recognized the need to bring this design information up to date, HAM TIPS—in the last issue—featured Part I of a two-part article prepared by W3FAL. This first part extended the calculations to include cathode-drive (grounded-grid) operation of tetrodes and triodes in class AB$_1$ service.

Now, in this issue, Part II covers the procedure for calculating typical operating conditions for class B operation of triodes or triode-connected tetrodes in a cathode-drive circuit.

Sample calculations are based on published data and curves for the RCA-7094 power tetrode. (The last issue also included a chart listing maximum ratings and typical operating conditions for several widely used RCA power tubes.)

Class B Operation of Triodes Or Triode-Connected Tetrodes (Cathode-Drive Circuit)

Hams who want to operate tubes at conditions other than those given in the published data can calculate typical operating conditions from the maximum ratings and characteristics curves. Follow the procedure enumerated below to figure the typical operating conditions for class B operation of triodes or triode-connected tetrodes in a cathode-drive circuit. This procedure may be adapted to grid-drive service by elimination of step 13 and of the term P_{ft} from steps 14 and 15. (P_{ft} is one of 21 symbols which are defined on page 2.)

(1) Make sure that E_b is within maximum ratings.

(2) Assume a value of I_{bms} approximately

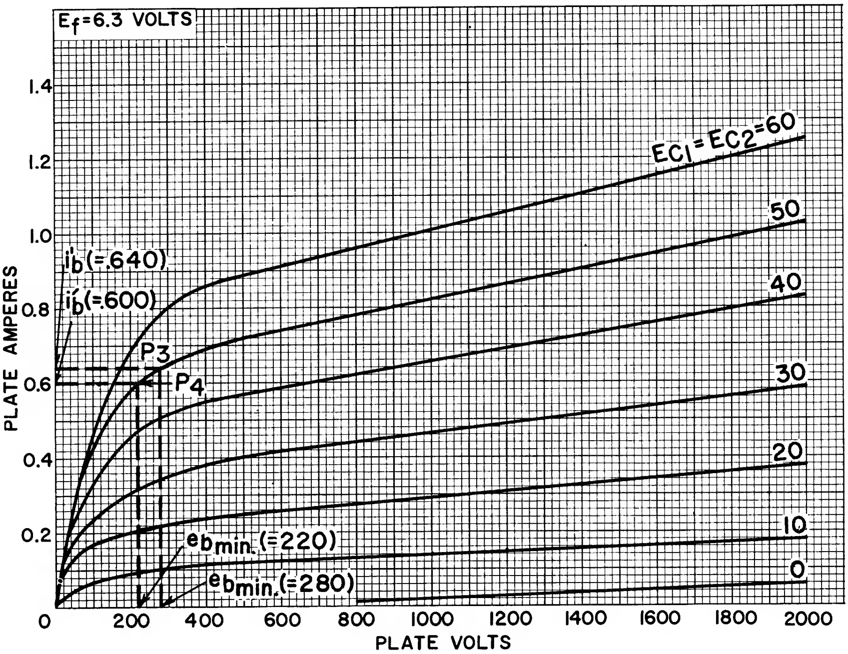

Figure 1: Typical plate characteristics of type 7094 triode connection (grid No. 1 connected to grid No. 2).

E_b	*DC plate voltage (with respect to cathode)*
e_{bmin}	*Minimum plate voltage necessary to produce the required peak current (from the characteristics curves)*
E_{c2}	*DC screen-grid voltage*
E_{c1}	*DC control-grid voltage*
e_{cm}	*Maximum control-grid drive voltage needed to obtain the required peak plate current at a given minimum plate voltage*
E'_g	*Peak value of control-grid voltage swing*
I_{bms}	*Maximum signal, dc plate current*
I_{bo}	*Zero-signal, dc plate current*
i'_b	*Instantaneous peak plate current*
I_{c1}	*Maximum-signal, dc control-grid current*
I_{c2}	*Maximum-signal, dc screen-grid current*
i'_{c1}	*Instantaneous peak control-grid current*
i'_{c2}	*Instantaneous peak screen-grid current*
PD	*Plate dissipation at maximum signal*
PD_o	*Plate dissipation at zero signal*
PI	*Plate power input at maximum signal*
PO	*Power output at maximum signal*
P_{ft}	*Feed-through power at maximum signal (cathode-drive operation)*
DP	*Driving power at maximum signal*
SI	*Screen-grid input at maximum signal*
R_p	*Effective rf plate-load resistance*

equal to 3 (rated maximum PD)/E_b. This value should be within the maximum ratings for the tube. If it is not, use the maximum rated value of I_{bms}.

(3) Calculate I_{bo}: $I_{bo} = I_{bms}/5$.

(4) Calculate PD_o: $PD_o = E_b I_{bo}$. The value of PD_o should not exceed the CCS plate-dissipation rating. If it does, determine I_{bo} as follows: I_{bo} = rated CCS PD/E_b, and use this value instead of the value obtained in step 3.

(5) Determine E_{c1} from the plate-characteristics curves as the control-grid voltage at which the plate voltage is E_b and the plate current is I_{bo}. For zero-bias operation, I_{bo} is the plate current at the point on the curve for zero control-grid voltage at which the plate voltage equals E_b; calculate $PD_o = I_{bo} E_b$. If the value of PD_o exceeds the CCS plate-dissipation rating, a new point must be selected at a lower value of E_b. If the plate-dissipation rating can be met without drastic reduction of E_b, repeat steps 1 and 2 and continue with step 6.

(6) Calculate i'_b: $i'_b = 3\ I_{bms}$.

(7) From the plate-characteristics curves, select a value of e_{bmin} near the knee of the curves at which i'_b can be obtained; record e_{cm} and $i'_{c1} + i'_{c2}$ for this point.

(8) Calculate PD: $PD = (I_{bms}/4)\ (E_b + 3\ e_{bmin})$.

(9) Calculate $I_{c1} + I_{c2}$: $I_{c1} + I_{c2} = (i'_{c1} + i'_{c2})/4$.

(10) Calculate PI: PI – $E_b\ I_{bms}$.

(11) Check the values obtained in steps 8 through 10 to determine whether they are within the maximum ratings for the tube type. If the calculated values exceed the maximum ratings, choose a lower value of I_{bms} and repeat steps 3 through 10.

If all the values are well below maximum ratings, a higher value of I_{bms} can be chosen in step 2, and steps 3 through 10 repeated to see whether the operation is still within ratings. If so, the latter set of operating conditions can be used to provide slightly more power output.

When values slightly below the maximum ratings are obtained for plate dissipation, control-grid and screen-grid currents, and plate input, the corresponding value of I_{bms} represents the maximum value which can be used at the original plate voltage selected. Lower values of I_{bms}, which provide more conservative operation but less power output, can also be used.

(12) Calculate $E'g$: $E'g = |Ec_1| + e_{cm}$.

(13) Calculate P_{ft}: $P_{ft} = E'_g i'_b/4$.

(14) Calculate PO: $PO = (E_b - e_{bmin}) i'_b/4 + P_{ft}$.

(15) Calculate DP: $DP = E'_g (i'_{c1} + i'_{c2})/4 + P_{ft}$. In cathode-drive operation, the driver output need be only slightly greater than the calculated DP because P_{ft} is normally large compared to the rf tube and circuit losses.

(16) Calculate R_p: $R_p = E_b/1.7\ I_{bms}$.

* * *

Example—Here is an example that illustrates the calculation of typical operating conditions for class B triode-connected ICAS operation of the 7094 tetrode in a cathode-drive circuit:

(1) The maximum plate-voltage rating is 2000 volts.

(2) $I_{bms} = 3$ (rated ICAS PD)/E_b = $3(125)/2000 = 0.188$ ampere; this value is within ratings.

(3) $I_{bo} = I_{bms}/5 = 0.188/5 = 0.038$ ampere.

(4) $PD_o = E_b\ I_{bo} = (2000)\ (0.038) =$ 76 watts; this value is within the CCS plate-dissipation rating.

(5) E_{c1} can be determined from the plate-characteristics curves shown in Figure 1 as the grid voltage at which the plate voltage is 2000 volts and the plate current is 0.038 ampere; $E_{c1} = -2$ volts. Because this value is quite close to zero, zero-bias operation may be possible at the same or a slightly lower E_b. When E_b equals 2000 volts on the curve for zero control-grid voltage, I_{bo} is 0.060 ampere.

Recalculate step 4 using this value: $PD_o = (2000)\ (0.060) = 120$ watts.

Because this value exceeds the maximum CCS plate-dissipation rating, a lower value of E_b must be chosen. At the point where E_b is 1750 volts, I_{bo} is 0.050 ampere.

Recalculate step 4: $PD_o = (1750)\ (0.050) = 88$ watts.

This value is within ratings. Recalculate step 2 and continue with step 6.

$I_{bms} = 3(125)/1750 = 0.214$ ampere.

(6) $i'_b = 3\ I_{bms} = 3(0.214) = 0.642$ ampere.

(7) Select a point P3 on knee of one of the curves shown in Figure 1 at which i'_b equals 0.642 ampere. At this point, e_{cm} is + 50 volts and e_{bmin} is 280 volts. From the curves shown in Figure 2, $i'_{c1} + i'_{c2}$ equals 0.520 ampere.

(8) $PD = I_{bms}/4\ (E_b = 3\ e_{bmin}) = 0.214/4\ [1750 + 3\ (280)] = 139$ watts.

(9) $I_{c1} + I_{c2} = (i'_{c1} + i'_{c2})/4 = 0.520/4 = 0.130$ ampere.

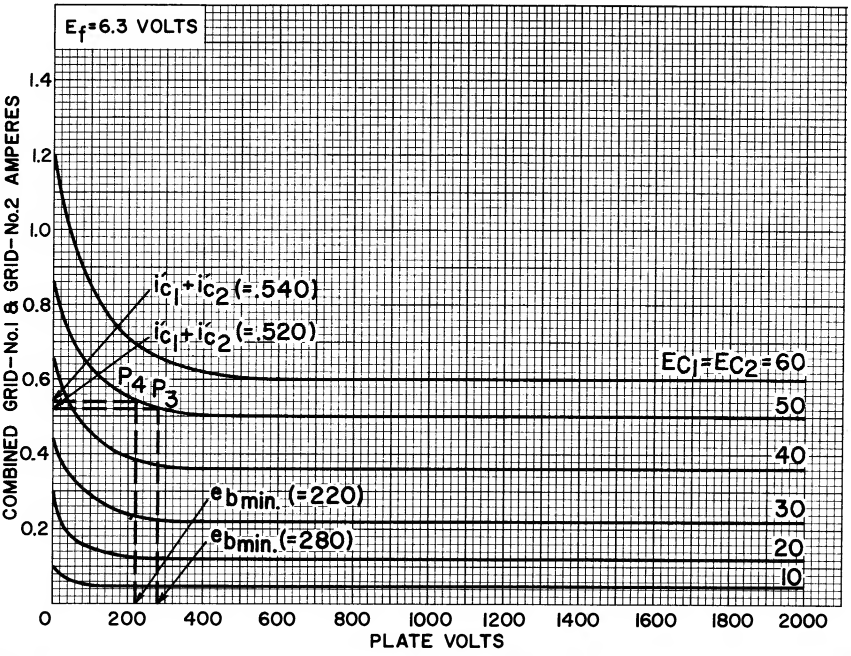

Figure 2: Typical grid characteristics for type 7094 triode connection (grid No. 1 connected to grid No. 2.)

(10) $PI = E_b I_{bms} = (1750)(0.214) = 375$ watts.

(11) Because the value of PD obtained in step 8 is above the maximum ICAS rating, select a lower value of I_{bms} to obtain a lower value of i'_b and e_{bmin}, and recalculate steps 6 through 10.

$I_{bms} = 0.200$ ampere.

$i'_b = 3\ (0.200) = 0.600$ ampere.

At the new point P4, $e_{cm} = +50$ volts, $e_{bmin} = 220$ volts, and $i'_{c1} + i'_{c2} = 0.540$ ampere.

$PD = 0.200/4\ [1750 + 3\ (220)\ ] = 120$ watts.

$I_{c1} + I_{c2} = 0.540/4 = 0.135$ ampere.

$PI = (1750)\ (0.200) = 350$ watts.

All values are now within ratings; therefore, the remainder of the calculations can be completed.

(12) $E'_g = |E_{c1}| + e_{cm} = 0 + 50 = 50$ volts.

(13) $P_{ft} = E'_g\, i'_b/4 = 50\ (0.600)/4 = 7.5$ watts.

(14) $PO = (E_b = e_{bmin})\ i'_b/4 + P_{ft} = (1750 - 220)\ (0.600)/4 + 7.5 = 237$ watts.

(15) $DP = E'_g\ (i'_{c1} + i'_{c2})/4 + P_{ft} = (50)\ (0.540)/4 + 7.5 = 14$ watts.

(16) $R_p = E_b/1.7\ I_{bms} = 1750/(1.7 \times 0.200) = 5100$ ohms.

These values compare reasonably well with the published values.

* * *

Conclusion—Table I (published in the last issue: December, 1960) shows the maximum ratings and typical operating conditions for several popular RCA tubes in linear rf amplifier service for single-sideband, suppressed-carrier service.

It should be remembered that the typical operating conditions shown by the manufacturer (or calculated by the preceding methods) are only approximate. Minor adjustments are usually made in actual operation by slight variation of the control-grid bias or screen-grid voltage. In linear rf amplifier circuits for single-sideband, suppressed-carrier transmission, it is particularly important to check the actual operating conditions when the transmitter is first set up to assure that linear operation within the maximum tube ratings is being obtained.

From your local RCA distributor, headquarters for RCA receiving and power tubes.

RCA HAM TIPS is published by the RCA Electron Tube Division, Harrison, N. J. It is available free of charge from RCA distributors.

Harvey Slovik, Editor

GEORGE D. BARBEY CO., INC.
Reading Pottstown
Lancaster Lebanon

RCA HAM TIPS

A PUBLICATION OF THE RCA ELECTRON TUBE DIVISION

VOL. 21, NO. 2 © 1961, RADIO CORPORATION OF AMERICA MAY, 1961

NUVISTOR TWO-METER CONVERTER

By R. M. Mendelson, W2OKO

RCA Electron Tube Division, Harrison, N.J.

RCA nuvistor receiving tubes—designed, engineered, and constructed for VHF operation—have opened an entirely new field of amateur radio activity.

Consider the RCA-6CW4, for example. Its wide acceptance as an rf amplifier tube for television fringe areas has proven its superiority over conventional triodes for weak-signal amplification. When used with the latest thimble-size nuvistor, the RCA-7587 tetrode mixer, the overall performance of the 6CW4 as a front-end VHF converter is considerably enhanced.

The 7587 has many advantages over its older glass-tube counterparts. In addition to small size, low heater power, rugged construction, and low lead inductance, the nuvistor tetrode has a high transconductance (almost twice that of the nearest glass tube) at a low plate voltage and plate current. It also has reduced input loading because it needs low local-oscillator drive. Because the tube has a high conversion gain, it provides a good output-signal voltage.

As shown in the schematic for a VHF mixer (Figure 1), the RCA-6CW4 is used as a low-noise rf amplifier followed by an RCA-7587 tetrode mixer. Another 6CW4 is used in a one-stage overtone crystal oscillator. The rf amplifier, an inductance-neutralized stage, is similar to one described in the September, 1960, issue of QST. The mixer and oscillator stages make optimum use of the unique nuvistor characteristics. Power required for the heaters is 410 milliamperes at 6.3 volts; for the B+ voltage, approximately 25 milliamperes at 110 volts.

Construction

All coils except the rf-amplifier input coil have been wound on slug-tuned forms to provide neat construction and ease of alignment. Slug tuning eliminates the need for pulling and squeezing neatly wound coils for proper tuning. If the template given in Figure 4 is

Top and bottom view of W2OKO's nuvistor two-meter converter.

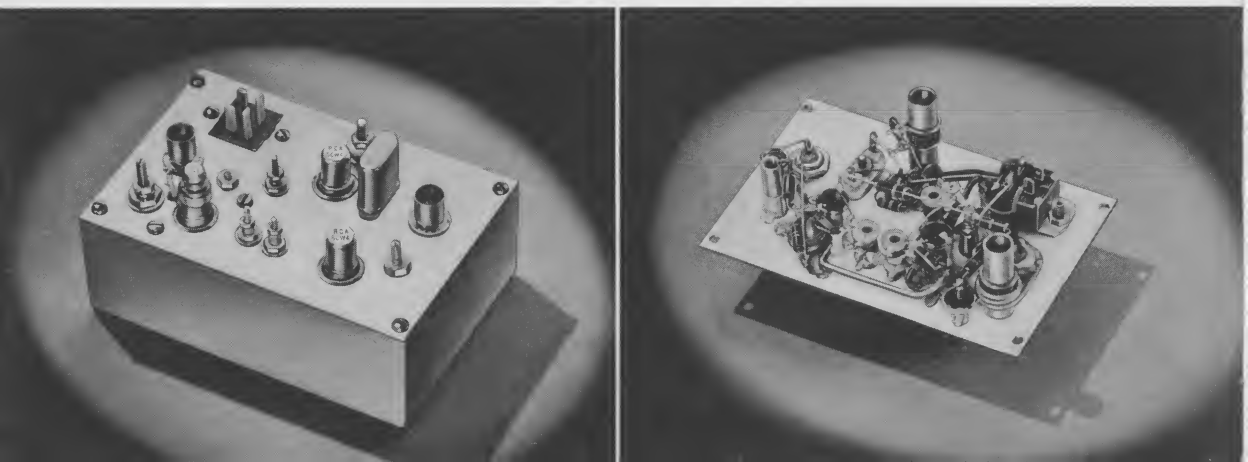

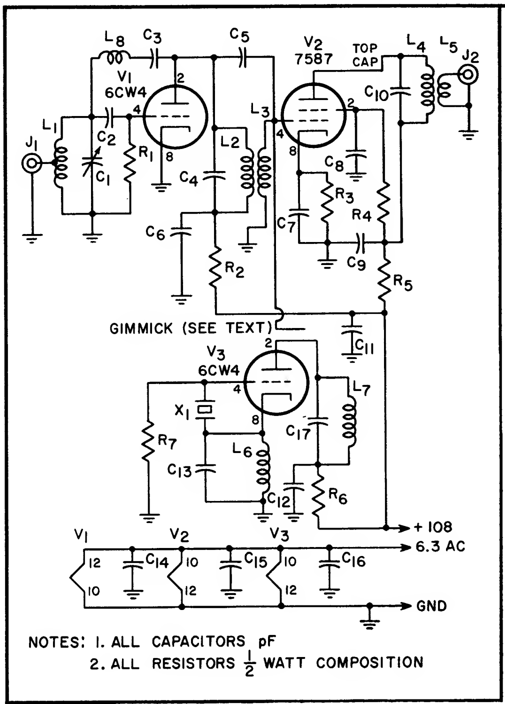

C_1—0.5 to 5 pf tubular trimmer (Erie type 532A or equiv.)

C_2, C_3, C_{11}, C_{12}, C_{14}, C_{15}, C_{16}—500 pf ceramic disc (Centralab type DD 501 or equiv.)

C_4, C_{17}—3.3 pf ceramic tubular (Centralab type TCZ 3R3 or equiv.)

C_5—2.2 pf ceramic tubular (Centralab type TCZ 2R2 or equiv.)

C_6, C_7, C_8, C_9—500 pf silver button (Erie type 370 CB-501K or equiv.)

C_{10}, C_{13}—30 pf ceramic (Centralab type DD 300 or equiv.)

J_1, J_2—Coax jack type BNC

L_1—5 turns No. 16 bare wire, ¼-inch diameter, spaced wire diameter, tap 2 turns up or best noise figure

L_2—4 turns No. 26 enamelled wire, ¼-inch diameter, close wound on slug-tuned form (CTC-PLST or equiv.)

L_3—4 turns No. 26 enamelled wire, ¼-inch diameter, close wound on slug-tuned form (CTC-PLST or equiv.)

L_4—11 turns No. 26 enamelled wire, ⅜-inch diameter, close wound on slug-tuned form (CTC-LS3 or equiv.)

L_5—3 turns insulated wire, close wound link

L_6—5 turns No. 26 enamelled wire, ⅜-inch diameter, close wound on slug-tuned form (CTC-LS3 or equiv.)

L_7—7 turns No. 26 enamelled wire, ¼-inch diameter, close wound on slug-tuned form (CTC-PLST or equiv.)

L_8—25 turns No. 30 enamelled wire, wound on 1-megohm ½-watt resistor, approximately 5⁄16-inch long; adjust for neutralization (see text)

R_1—47,000 ohm, ½ watt

R_2—6800 ohm, ½ watt

R_3—68 ohm, ½ watt

R_4—18,000 ohm, ½ watt

R_5—470 ohm, ½ watt

R_6—27,000 ohm, ½ watt

R_7—100,000 ohm, ½ watt

Miscellaneous—1 standoff insulator; 1 socket (Jones type P304AB or equiv.); 1 crystal 39.33 megacycle overtone (International Crystal Co. type FA5 or equiv.) for output 26-30 Mc; 3 nuvistor sockets (Cinch No. 133 65 10 0.011)

Figure 1: Schematic diagram and parts list.

used for layout, the coils can be mounted in the same position as on the original model, and unwanted feedbacks and intercouplings will be eliminated. The oscillator coil is coupled to the mixer input by a lead wire from the grid end of the mixer coil to an unused lug on the plate end of the oscillator coil. No further coupling is needed.

Because of their small size, nuvistor sockets are clamped (rather than bolted) to the chassis by bending two lugs on the socket. After the chassis hole is drilled, two notches are hand-filed (see Figure 4) to insure a tight fit of the socket to the chassis. For grounding, both socket lugs are soldered to the chassis, which should be a copper or brass plate. All ground connections for each socket should be made to the socket lugs, except in the case of the rf-amplifier, which uses the rf shield as the ground return. This rf shield for the amplifier tube (shown in Figure 2) is a thin piece of brass or copper soldered to pins 8 and 10 of the socket and to the chassis. As in all VHF construction, good grounds are essential. Connection to the top cap (of the tetrode) is best made with a piece of piano wire looped into a tight-fitting one-turn coil.

The converter described in this article was built for use at an if output frequency of 26 to 30 megacycles. For lower if outputs, only the crystal and the if output coil frequencies need be changed. If operation at 14 to 18 megacycles is desired, a crystal frequency of 43.3 megacycles should be used. No changes

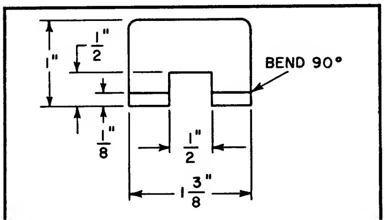

Figure 2: Base shield.

are necessary in the oscillator coil. The output coil requires approximately 22 turns to tune to 14 megacycles.

Alignment

Alignment of this two-meter converter is simple. You need only a grid-dip meter and a receiver having an S meter. If available, sweep generators and noise sources can be used for greater accuracy in alignment.

First, use the grid-dip meter to set all coils to the correct frequencies: L_1, L_2, and L_3 to 146 megacycles, L_4 to 28 megacycles, L_6 to 40 megacycles, and L_7 to 118 megacycles.

Next, connect the antenna and receiver to the converter and apply power. The high-voltage input should not exceed 125 volts, the plate-voltage maximum rating for the 6CW4 and the 7587.

Check that the wiring is correct by comparing the voltages with those in the following table. All voltages are with respect to ground and may vary by 20%.

	Tube Type			
	V_1	*V_2*	*V_3*	
Voltage	*6CW4*	*7587*	*6CW4*	
Plate to ground	65	103	50	volts
Screen grid to ground	—	50	—	volts
Control grid to ground	0	0	0	volts
Cathode to ground	0	−0.7	0	volts

If the grid-dip meter adjustments are made correctly, signals can be heard on the two-meter band. If no signals are heard, the oscillator should be checked by removing the crystal from the socket. With the crystal removed, the background noise from the receiver should fall off. A slight readjustment of L_6 may be necessary to start up the oscillation. L_7 should be peaked for maximum oscillator output.

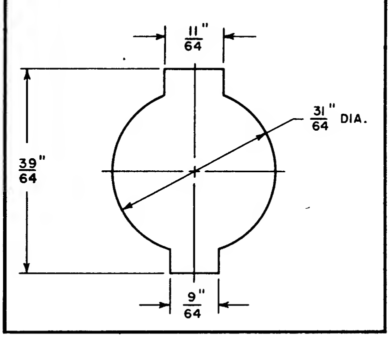

Figure 3: Nuvistor socket hole.

Tune in a signal at about 145 megacycles and tune L_2 for maximum S-meter reading. Repeat at 147 megacycles and tune L_3. Find a signal near the middle of the band and tune $L_1 - C_1$. This tuning is very broad.

The rf amplifier is most easily neutralized by first opening its heater lead. Adjust L_8 by starting with a few extra turns and removing one turn at a time to find the point of minimum feed-through of a strong signal when the other tubes are operating. This adjustment is not very critical.

Conclusion—The fine performance of this easily constructed nuvistor converter will surprise any ham who thought that a good converter was hard to build or required elaborate alignment equipment.

Figure 4: Top view of chassis plate (actual size). Note that #20, #32, and #38 are drill sizes.

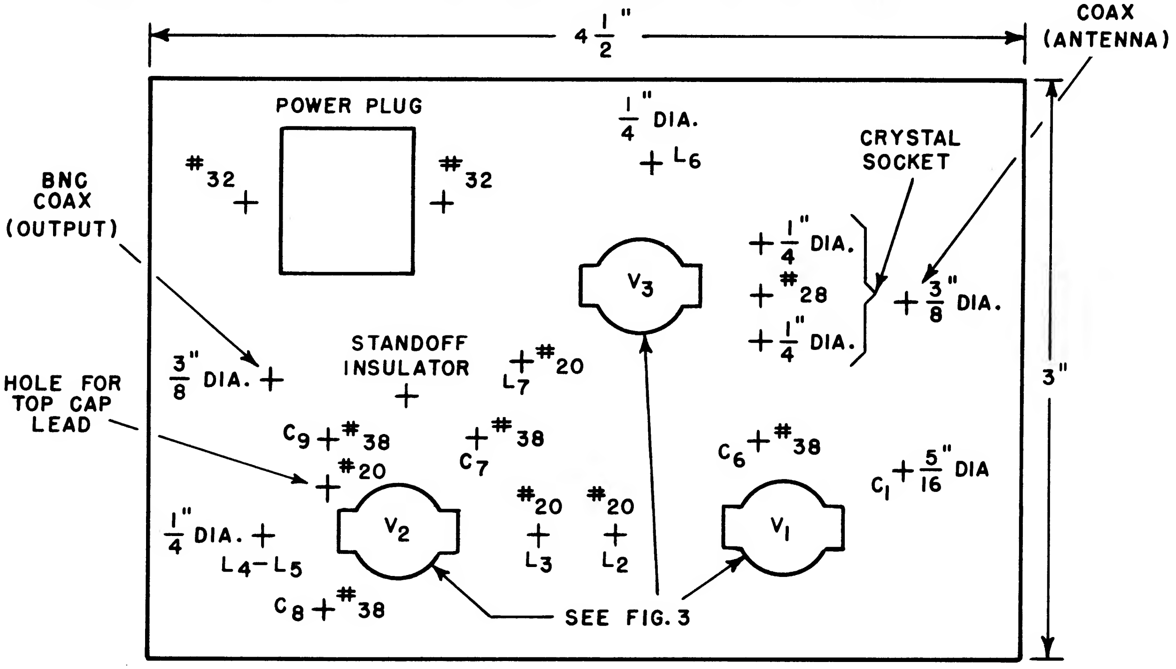

From your local RCA distributor, headquarters for RCA receiving and power tubes.

RCA HAM TIPS is published by the RCA Electron Tube Division, Harrison, N. J. It is available free of charge from RCA distributors.

•

Harvey Slovik, Editor

IT'S ELECTRONICS
LL BARBEY'S FIRST

WHEN MAILING
PLACE POSTAGE HERE

BLK. RT.

READING
PA.
U.S. POSTAGE
02 ½
P.B. METER 314629

GEORGE D. BARBEY CO., INC.
Reading Pottstown
Lancaster Lebanon

NOW IN KIT FORM!

The RCA Senior VoltOhmyst®

WV-98B(K)

ONLY **$62.50*** With probe, cable, clips and instruction booklet.

Featuring Pre-Assembled Etched-Circuit Board and Pre-Assembled DC/AC-OHMS Probe (WG-299D)

- Easy-to-read meter—6½" wide
- 200-microampere meter movement with less than 1% tracking error
- Precision multiplier resistors accurate to ± 1%
- Meter electronically protected against burnout
- Separate color-coded peak-to-peak and rms-voltage scales
- Die-cast aluminum case with leather carrying handle

MEASURES:

DC voltages, 0 to 1500 volts.
AC voltages, 0 to 1500 volt rms or 0 to 4200 volts peak-to-peak.
Resistances from 0.2 ohm to 1,000 megohms.

Real dollar-savings!
Assembly time is cut to the bone!

This extra-heavy etched-circuit board comes with all components completely mounted and soldered. The input probe and cable, likewise, comes to you already assembled and wired.

RCA WV-98B available factory-wired and calibrated: $79.50*

***User Price Optional**

The Most Trusted Name in Electronics
RADIO CORPORATION OF AMERICA

RCA HAM TIPS

A PUBLICATION OF THE RCA ELECTRON TUBE DIVISION

VOL. 21, NO. 3

SEPTEMBER, 1961

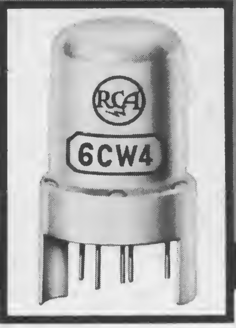

NUVISTOR PREAMPLIFIER

For Amateur Receivers

By M. Adams, WA2ELL, and P. Boivin, Jr., K2SKK

RCA Electron Tube Division, Harrison, N. J.

A comment frequently heard on the amateur bands is, "This receiver is fine on 80 up through 20 meters, but on 10 and 15 it seems to lose sensitivity." The problem is a common one, especially with older, general-coverage communications receivers which tune from 0.55 to 35 megacycles in four bands. Because the 10-meter band is near the upper limit of this tuning range, sensitivity often drops off as a result of stray capacitance and a less than optimum LC ratio for this frequency.

One solution to the problem is a ham-band-only receiver optimized for each band. However, on some older models of this type, 10-meter sensitivity still is not satisfactory. All-band preselectors are also available, but these are expensive, elaborate, and bulky; also the extra boost is usually not needed on the lower frequencies. This article describes a preamplifier that adds 25 to 35 db gain ahead of the receiver on the desired band and can be built for less than $15 from readily available parts.

TABLE I: PERFORMANCE DATA

Band—meters	Frequency—Mc	Gain—db
15	21.0	30
	21.5	30
10	28.0	27
	29.0	29
	30.0	26
6	50.0	17
	51.5	16

Design Features

The unit (shown below) is built around a pair of RCA-6CW4 nuvistor triodes. These tiny high-mu triodes, designed for use as TV-tuner rf amplifiers, work exceptionally well at 30 Mc. The preamplifier provides ample gain ahead of the receiver and improves the signal-to-noise ratio. The resulting overall sensitivity is equal to that of many higher-priced receivers. Gain measurements for the unit are shown in Table I.

Top view of authors' nuvistor preamplifier designed around two RCA-6CW4's.

As an example of what can be expected from this preamplifier, a 10-meter unit was

TABLE II: COIL DATA

Band—meters	Coil	C_1	C_2	Links
15	L_1—18 turns #32 enameled wire on ¼-inch slug-tuned form L_2—18 turns #32 enameled wire on ¼-inch slug-tuned form	15 μμf	15 μμf	1½ T
10	L_1—18 turns #32 enameled wire on ¼-inch slug-tuned form L_2—18 turns #32 enameled wire on ¼-inch slug-tuned form	5 μμf	5 μμt	1½ T
6	*L_1—10 turns #32 enameled wire on ¼-inch slug-tuned form *L_2—10 turns #32 enameled wire on ¼-inch slug-tuned form	5 μμf	6.8 μμf	1½ T

Note: All coils Cambion CTC DLSM 10 Mc.

*Same 10 Mc coil as above with 8 turns removed.

used ahead of a 10-year-old, general-coverage, single-conversion receiver in the $200 class. At 29 Mc, the receiver alone has a 10-db signal-to-noise ratio at an input of 20 microvolts. With the preamplifier ahead of the receiver, a 10-db signal-to-noise ratio is obtained at a 2.5-microvolt input. This improvement represents a sensitivity increase of 8 times at an equivalent signal-to-noise ratio. The preamplifier output impedance is 75 ohms, while the receiver input impedance may vary from 100 to 300 ohms depending on the design of the input network. If the unit is properly matched to the receiver, sensitivity can be improved even more.

An improvement in signal-to-noise ratio results from the lower noise factor of the nuvistor circuit as compared to that of older pentode amplifier designs. A noise figure of 4.5 db was measured for the nuvistor preamplifier by means of the noise-generator method. With the added gain of the preamplifier, the receiver front-end contributes negligible noise to the system. The noise factor of the preamplifier could be improved an additional 1 db by precise adjustment of the input link and proper tuning. However, the simplicity of alignment would be lost, and the resulting improvement in performance would be difficult to detect in actual use.

TABLE III: ALIGNMENT DATA

Band	Tune L_1 to	Tune L_2 to
15 M	21.25 Mc	21.25 Mc
10 M	32.00 Mc	29.50 Mc
6 M	51.00 Mc	50.00 Mc

Construction and Alignment

Similar to the cascode amplifier in the ARRL Amateur Handbook, the circuit, shown in Figure 1, is used in many TV tuners. It has been reduced to its basic form to simplify construction and alignment. As indicated in Table II, a 1½-turn link around the hot end of L_1 matches a 75-ohm coaxial transmission line to the high-impedance input of a conventional grounded-cathode amplifier V_1. The output of V_1 is fed to the cathode of V_2, a grounded-grid amplifier in which the output appears across plate coil L_2. Another link around L_2 couples the output signal to a 75-ohm line to the receiver. Even though this type of amplifier is inherently stable, ample decoupling and bypassing have been included in the design. V_1 and V_2 are operated in a stacked arrangement in series with the B+ supply. Proper bias for V_2 is maintained by tying the grid back to the plate of V_1 through R_3. Because V_2 receives a larger signal than V_1, additional bias for V_2 is obtained across R_2.

All the parts required are available through local RCA tube distributors, including the 6CW4 nuvistor triodes and sockets. Although lower-cost tube types may be used for V_1 and V_2, only the 6CW4 provides all the advantages of small size, low power drain, and excellent performance. In addition, two separate tubes provide better isolation and a more stable amplifier.

A 1½- by 2- by 4-inch aluminum minibox, shown in Figure 2, provides more than enough room for construction. As in any circuit at this frequency, leads should be kept short and the input isolated from the output.

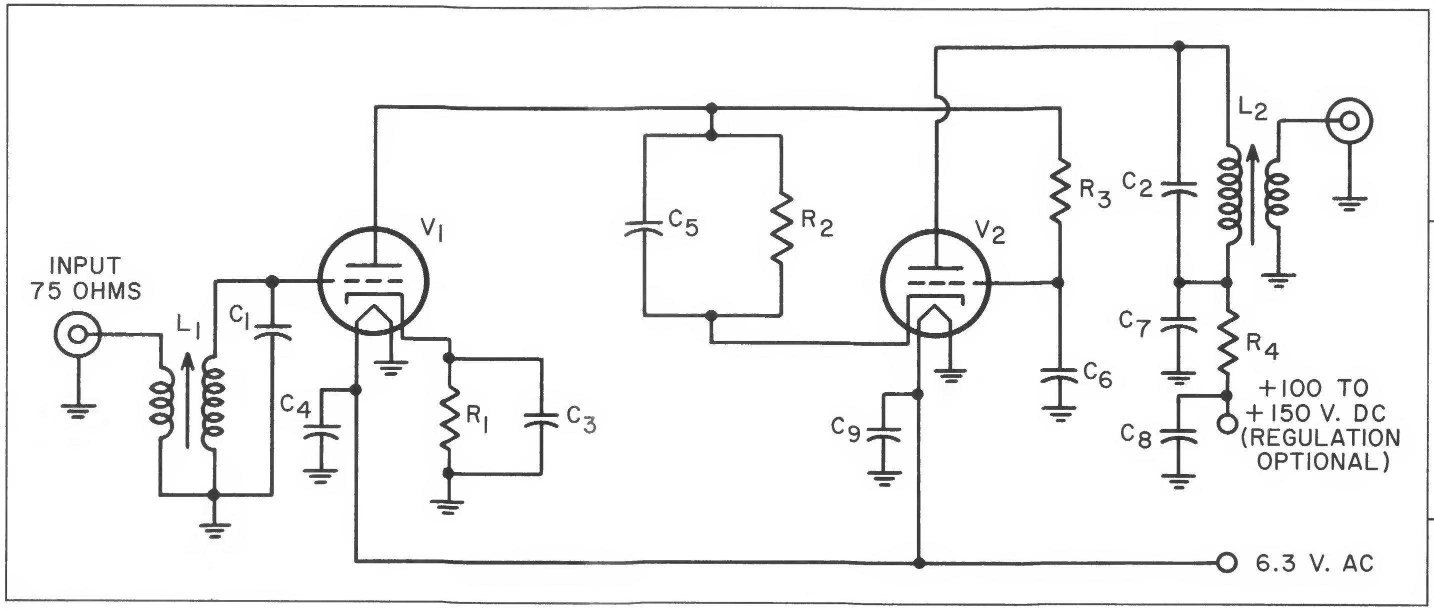

C_1, C_2—see coil data, Table II
C_3, C_4, C_5, C_6, C_7, C_8, C_9—0.001 μf, ceramic, 500 v
L_1, L_2–see coil data, Table II (Link: 1½ turns #32 enameled wire on form over other turns)
R_1, R_2—100 ohms, ½ w, carbon
R_3—470,000 ohms, ½ w, carbon
R_4—1,000 ohms, ½ w, carbon
V_1, V_2—6CW4

Figure 1: Schematic diagram and parts list.

Although the circuit is not especially critical, a shield has been placed between the two triodes for maximum isolation. Oscillation, which should not occur if the input and output are connected to the proper impedances, may be encountered if the antenna is not connected.

The original 10-meter unit was designed to use high-Q tuned circuits to obtain a flat-topped response over the band, and required careful tuning with the aid of a sweep generator and 'scope to obtain the desired response. The unit described in this article uses lower-Q tuned circuits which have a broader response. This arrangement is not only easier to align initially, but is also less sensitive to changes in supply voltage and loading. Alignment data for three bands are listed in Table III. The difference in gain over the band is not sufficient to degrade performance.

A grid-dip oscillator may be used to pre-set the coils at the correct frequency. For 15 meters, adjust L_1 and L_2 to a maximum indicated signal on the S-meter of the receiver with the preamplifier connected and a 21.25 Mc input signal. For 10 and 6 meters, adjust L_1 and L_2 with a grid-dip oscillator to the frequencies indicated in Table III, with no power connected to the preamplifier. The grid-dipper frequency should be checked against a reliable standard to insure correct alignment. The preamplifier cannot be tuned for 10 and 6 meters with a grid-dip oscillator if the heaters are on because grid current in V_1, due to the signal from the dip oscillator, will result in a false indication or no dip at all. If a sweep generator and 'scope are available, alignment is no problem. Simply tune the coils so that the edges of the band fall at the –3 db points on the response curve. The links should not have to be adjusted during alignment.

Figure 2: As stated in the text, a 1½- by 2- by 4-inch minibox provides more than enough room for construction.

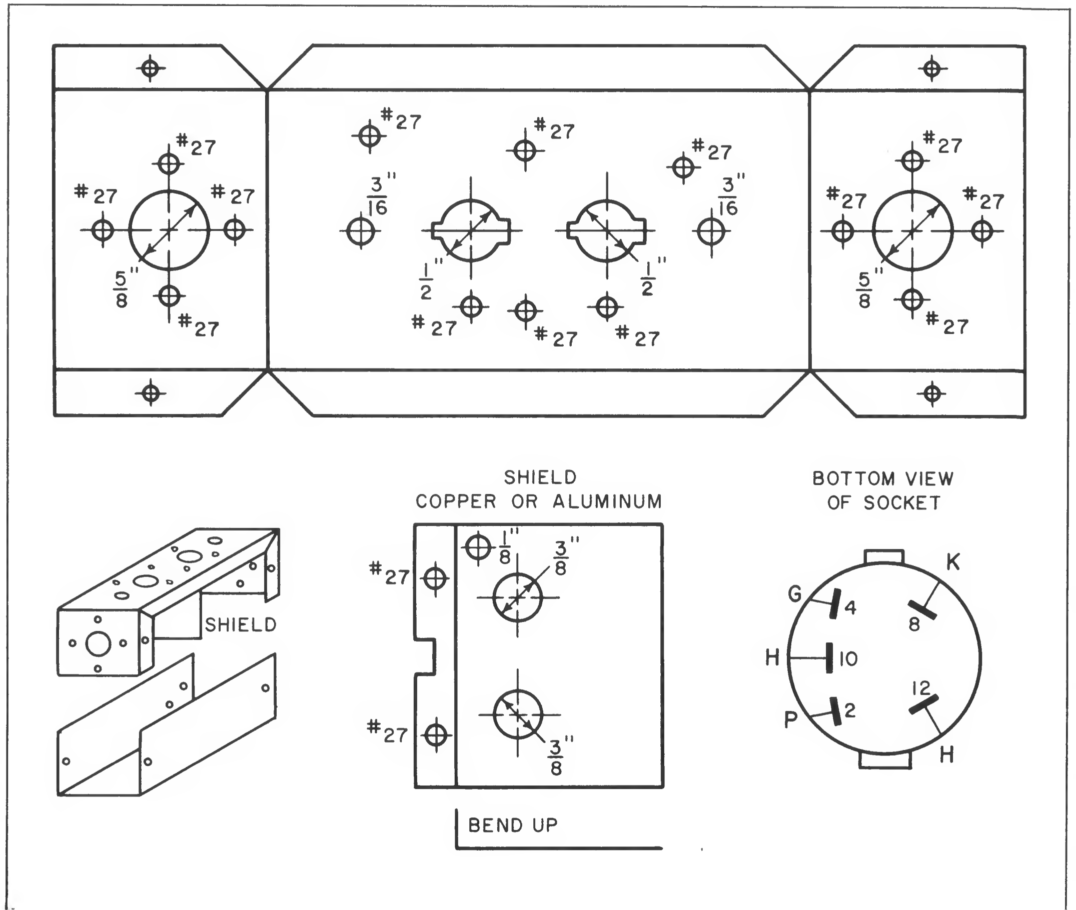

The preamplifier may be mounted inside the receiver cabinet, but should be more convenient to disconnect if mounted on the back near the antenna terminal. The maximum length of coaxial cable between the receiver and the preamplifier should not exceed 12 inches. The small power requirements (5 milliamperes at 150 volts and 0.26 amperes at 6.3 volts) may be obtained from the receiver through the accessory plug. The unit described uses 75-ohm coaxial connectors for easy changeover to bands where the preamplifier is not needed. If a balanced antenna system is used, terminal strips for the twin-lead may be used instead of coaxial connectors. In this case, the input link around L_1 would not be grounded. If 300-ohm twin-line is used for the input, one extra turn should be added to the input link to match the line.

When to Use

The nuvistor preamplifier is not intended to improve the image rejection of a single conversion receiver. Because response is intentionally made broad to eliminate tuning during operation, images will be present whether the unit is used or not. The increased sensitivity of the receiver due to the nuvistor unit will be apparent from the rise in background noise level. In addition, signals that were previously about equal to the background noise in strength will be 3 or 4 S-units above the noise with the preamplifier connected, due to the improvement in signal-to-noise ratio in the front-end. The greatest improvement will be noticed in receivers having poor sensitivity initially. Little advantage is gained in receivers which have 1.5 to 3 microvolt sensitivity and a good signal-to-noise ratio. If it is desired to use this circuit on 6 meters, the design can be incorporated in a crystal-controlled or tunable-type converter. This arrangement would eliminate tracking problems because the rf section would not have to be tuned after initial alignment.

The nuvistor preamplifier has been designed for best performance consistent with simplicity and ease of construction and alignment. If you have not been hearing those signals on ten, here is the opportunity to obtain top performance from your receiver with a minimum investment.

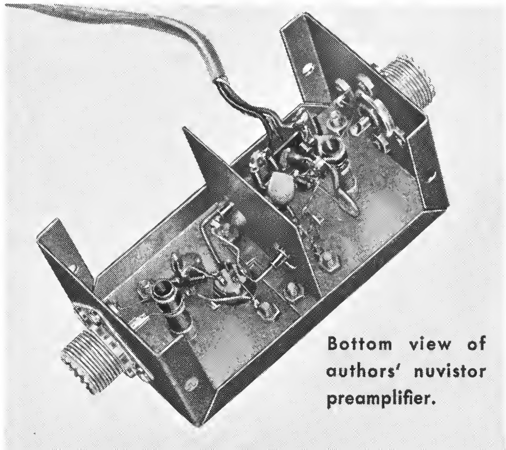

Bottom view of authors' nuvistor preamplifier.

NEW N-85-R FILAMENT

adds even longer life to these popular RCA Rectifier Tubes

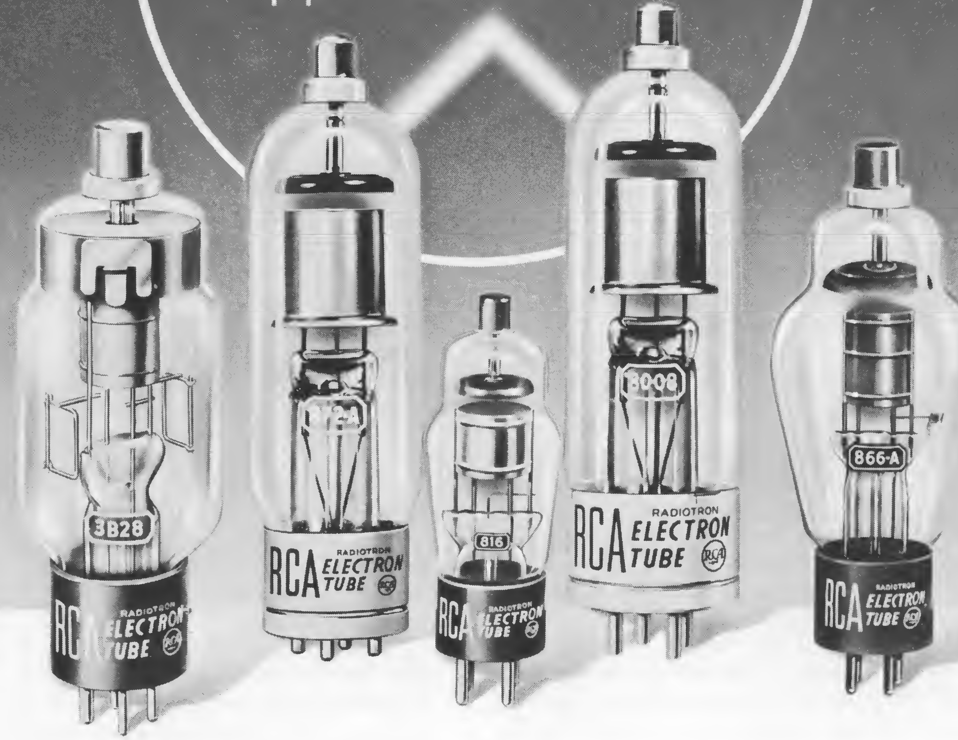

In accordance with RCA's continued policy to provide the radio amateur with the highest performance tubes consistent with the best engineering practice known, every rectifier tube shown here is now designed and built with the new, improved coated filament—N-85-R!

N-85-R filament design prolongs peak emission capability. Immediate "in-rig" benefits to you are: increased rectifier-tube reliability, and longer rectifier-tube life.

Check the chart for the types that fit your dc power requirements. Then order direct from your RCA industrial-tube distributor. For technical data on any of these types, write: Commercial Engineering, RCA Electron Tube Division, Harrison, N. J.

RCA Rectifier Tubes—with the new N-85-R Filament
(Based on use of 2 tubes in full-wave circuit, choke-input filter)

Type	Name	Max. Transf. Sec. Volts (RMS)	Approx. DC Output Volts	Max. DC Output Amperes
RCA-3B28*	Half-wave, gas	3500 1700	3200 1600	0.5 1.0
RCA-816	Half-wave, mercury-vapor	2600	2400	0.25
RCA-866A	Half-wave, mercury-vapor	3500 800	3200 800	0.5 1.0
RCA-872A	Half-wave, mercury-vapor	3500	3200	2.5
RCA-8008†	Half-wave, mercury-vapor	3500	3200	2.5

*For low noise-level applications. †Same as RCA-872A, but has long-pin base.

From your local RCA distributor, headquarters for RCA receiving and power tubes.

RCA HAM TIPS is published by the RCA Electron Tube Division, Harrison, N. J. It is available free of charge from RCA distributors.

•

Harvey Slovik, Editor

F IT'S ELECTRONICS
ALL BARBEY'S FIRST

GEORGE D. BARBEY CO., INC.
Reading Pottstown
Lancaster Lebano

BLK. RT.

WHEN MAILING
PLACE POSTAGE HERE

READING PA.
U.S POSTAGE 02½
PB METER 314629

KEEP A CONSTANT CHECK ON YOUR LINE VOLTAGE

with the New RCA WV-120A POWER LINE MONITOR

- **EXPANDED SCALE**
  Scale is expanded from 100 to 140 volts for easy reading
- **HIGH ACCURACY**
  ±2% at 120 volts; ±3% at 100 and 140 volts
- **TRUE RMS READINGS**
  Moving-vane type meter gives accurate RMS readings, even when line voltage is not pure sine wave
- **FAST METER ACTION**
  Reveals "bounces" and fluctuations in line voltage
- **LARGE NUMERALS, LARGE POINTER, LARGE SCALE**
  Provide easy readability from distance of ten feet or more
- **CONVENIENT WALL MOUNTING**
  Holes are provided in rear of case for wall mounting
- **LOW PRICE–ONLY $14.95***
  Extremely low priced for a large-sized, expanded scale, RMS meter of such high accuracy

See the RCA WV-120A at your Authorized RCA Electronic Instrument Distributor.

***User Price Optional**

HAM TIPS
A PUBLICATION OF THE RCA ELECTRON TUBE DIVISION
VOL. 21, NO. 4 ©1961, RADIO CORPORATION OF AMERICA DECEMBER, 1961

Transistors As RF Power Amplifiers

By J. B. Fisher, WA2CMR/6
Field Sales Engineering
RCA Semiconductor and Materials Division
Somerville, N. J.

Recent advances, particularly the advent of the high-frequency "mesa" device and the use of silicon, have brought transistors to the point where they may usefully serve as drivers for high-power-output tubes, or as power stages themselves. To effect a smooth transition from tube to transistor circuit design, however, the experimenting amateur should be aware of the major differences between the two devices. Some of the important considerations for rf power amplifier design are discussed below.

Class of Operation

The transistor is a natural class C amplifier because the emitter-base contact potential must be overcome before collector current will flow. A transistor connected as shown in Figure 1 is automatically biased in the class C region. As shown by the curves of Figure 2, a positive voltage of 0.3 volt for germanium types or 0.6 volt for silicon types must be applied to the base before collector current starts to flow.

Figure 1: Transistor connected as shown is automatically biased in class C region.

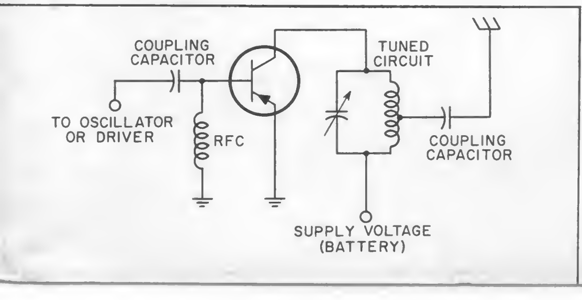

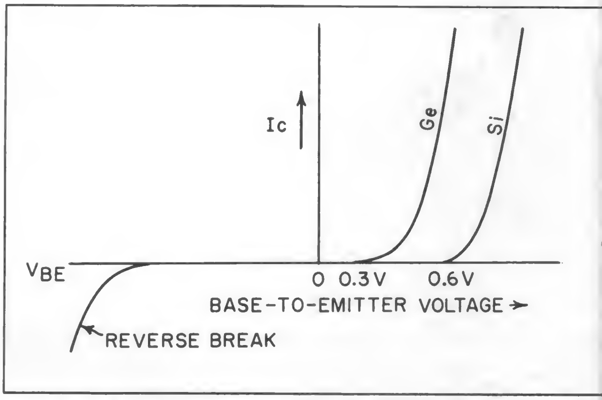

Figure 2: Before collector current will flow, a positive voltage of 0.3 volt or 0.6 volt must be respectively applied to base of germanium or silicon transistor types.

For class B operation, the transistor is forward-biased to the point where collector current just begins to flow. For class A or linear operation, additional forward bias is applied until the desired collector current is drawn.

The circuit for class A or class B operation is shown in Figure 3. The emitter resistance R_3 helps to stabilize the transistor and reduces the possibility of "thermal runaway" in the event of overheating.

"Base-leak" bias may be developed as shown in Figure 4. As base current is drawn, capacitor C charges to the voltage developed across R. If the time constant of RC is long, as compared to one cycle of the transmitted frequency, the charge is retained for this time. This procedure requires additional driving power to the transistor, however, and does not appreciably increase efficiency.

Care must be taken to insure that the base is not driven too far in the reverse direction. Such "overdriving" could damage the transistor or cause loading of the preceding stage.

Matching

For maximum power output and gain, both the input and output of a transistor circuit should be matched. This procedure differs from tube-circuit design, in which the grid input is usually considered as a high impedance and no attempt is made to match into it.

The input impedance of grounded-emitter stages decreases with increasing power output and is lowest for high-power transistors. Typically, this impedance ranges from 1,000 ohms in the milliwatt region to about 5 ohms for power of 1 watt or more. Grounded-base input impedance is always low, usually in the range from 100 ohms down to about 5 ohms.

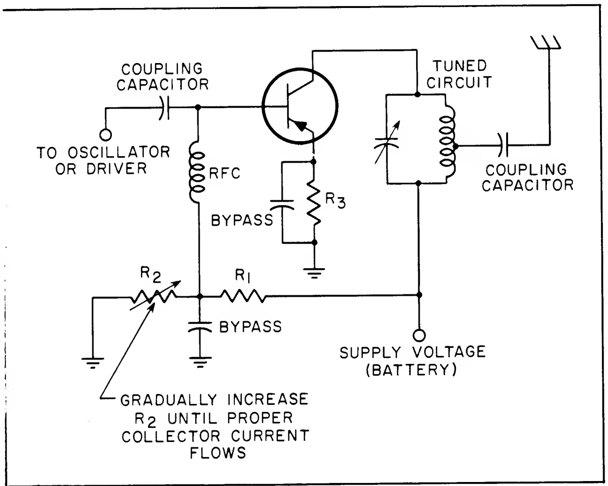

Figure 3: Schematic of class A or B amplifier.

Output or collector impedance R_{out} is best obtained from the power required P_{out} and the supply voltage E, as follows:

$$R_{out} = \frac{E^2}{2 P_{out}}$$

This equation is not exact, but it does provide an approximate figure for design purposes. The output is always capacitive. This capacitance is generally designated by the manufacturer as C_{ob}. The input is usually capacitive at frequencies below 50 megacycles, but may become inductive at higher frequencies.

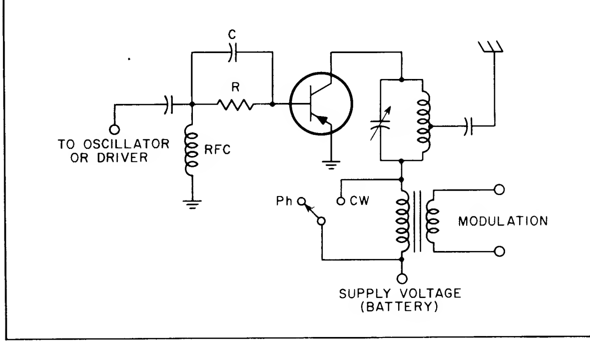

Figure 4: "Base-leak" bias and collector modulation.

[Detailed information on matching is given in the "RCA Silicon VHF Transistors Application Guide" (1CE-228). You can obtain this publication from your local RCA semiconductor distributor. It is also available for 50¢ from Commercial Engineering, RCA Semiconductor and Materials Division, Somerville, N. J.]

Efficiency

If a transistor is operated well below its alpha cutoff frequency (the frequency at which the forward current gain is 0.707 times its low-frequency value), the theoretical maximum efficiencies for its class of operation can nearly be achieved. For example, the circuit shown in Figure 5 has provided better than 90% efficiency at 50 megacycles with an output of 1 watt. Efficiencies close to 75% can be obtained in class B stages, and nearly 50% in well-designed class A stages.

Neutralization

The greatest similarity between tubes and transistors is in the area of neutralization. The feedback capacitance, sometimes referred to as $C_{b'c}$, is equivalent to grid-plate capacitance in tubes. This capacitance is the major cause of self-oscillation within the transistor.

Figure 5: Schematic of class C, grounded collector, common emitter amplifier.

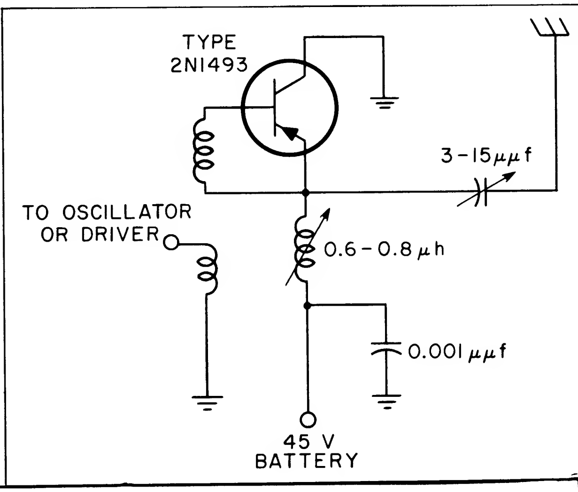

If the transistor is operated in the common-emitter configuration, this capacitance feeds back a small portion of the collector signal to the base. If this signal is sufficient to overcome base losses, the unit will oscillate. This situation is equivalent to that observed in grounded-cathode operation of triodes. In well-shielded radio-frequency amplifiers, it should be possible to operate the transistor at frequencies up to one-third to one-half its alpha cutoff frequency before neutralization is required.

The common-base configuration, like grounded-grid tube operation, is less subject to self-oscillation because the phase shift between input and output is minimized. At frequencies close to alpha cutoff, however, even this configuration should be neutralized.

Neutralization is accomplished by cancelling out the effects of $C_{b'c}$. Typical neutralization circuits are shown in Figure 6. If the transistor is operated class A, C_n may be adjusted by applying the drive to the output tank, with dc voltages on, and tuning for minimum rf at the input tank. For class C

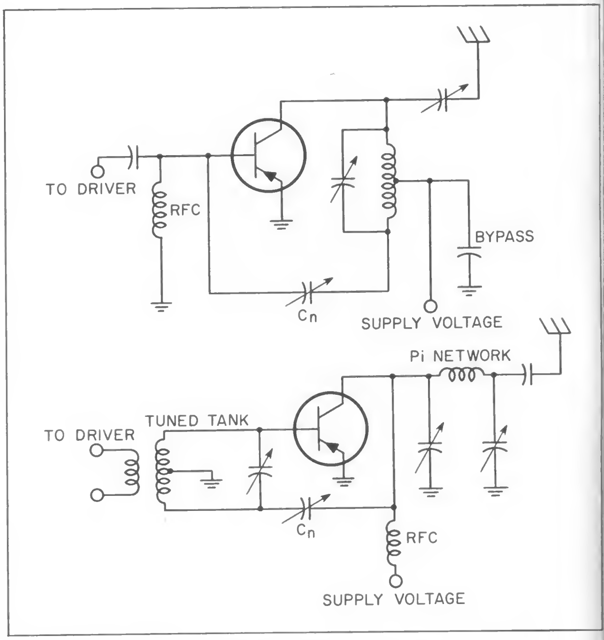

Figure 6: Typical neutralization circuits.

NEW RCA-6DS4 NUVISTOR TRIODE

Improves Two-Meter Converter

By R. M. Mendelson, W2OKO

RCA Electron Tube Division, Harrison, N. J.

Crystal-controlled VHF converters are usually designed for low noise and maximum sensitivity to improve reception of weak signals. For this reason, no provision is made for adjusting the gain of the rf amplifier.

The nuvistor two-meter converter described in Ham Tips (May, 1961) was so designed, and the RCA-6CW4 triode amplifier was operated "wide open" at all times. With only weak signals present, this arrangement is good. However, strong local signals can cause loading of the converter and crossmodulation.

Crossmodulation can be reduced by the use of automatic gain control on the 6CW4. The newly announced RCA-6DS4 nuvistor triode, however, is much better suited for this application because of its added feature of semiremote cutoff. Because the agc voltage in a communications receiver is not developed until a reasonably strong signal is received, the converter still has maximum sensitivity for weak signal reception.

Circuit Changes

Modification of the original converter is very simple. The new RCA-6DS4 is substituted in the same socket for the RCA-6CW4. One resistor and two capacitors are added.

As stated in the text under "Circuit Changes," to modify W2OKO's original two-meter converter, substitute an RCA-6DS4 nuvistor triode (with semiremote-cutoff characteristic) in the same socket for the RCA-6CW4 nuvistor triode, and add one resistor and two capacitors.

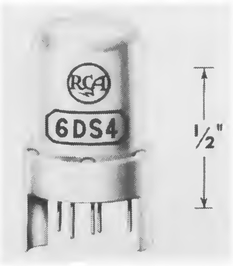

operation, C_n is made approximately equal to $C_{b'c}$, and is then adjusted for best stability of the amplifier with drive.

Heat Transfer

Heat transfer is an important problem in transistor-circuit design, although it is seldom encountered with tubes. Some means should be employed to remove heat from the transistor, especially when its maximum collector dissipation is approached. Heat transfer may be accomplished by solidly attaching or mounting the transistor case to the chassis or heat radiator. If the collector is internally tied to the case, the circuit shown in Figure 5 may be used. In this circuit, the collector is at rf and dc ground potential, although the transistor is operating in the common-emitter configuration.

Modulation

Modulation may be applied to the collector, base, or emitter of a transistor, as it may be applied to the plate, grid, or cathode of a tube. The efficiencies and percentages of modulation available from each type are very similar to those available in tubes. Collector modulation is shown in Figure 4.

Power Output

The amount of power available from a transistorized transmitter is determined by the type of transistor used. There are some low-cost germanium power transistors available with reasonably high alpha cutoff (about 7.5 megacycles) that should work well on 80 meters. With a pair of these (e.g., 2N1905's at an optional list price of about $6.00 apiece), a well-designed circuit will develop approximately 15 watts at 80 meters directly from a 12-volt storage battery. A new type now in development will put out 18 watts on 10 meters and 10 watts on 6 meters. RCA also has developmental types that will produce the maximum legal limit of 1 kilowatt on 80 meters. For the present, these types are limited in distribution and are relatively high in cost; but the amateur can look forward to their general availability in the not-too-distant future.

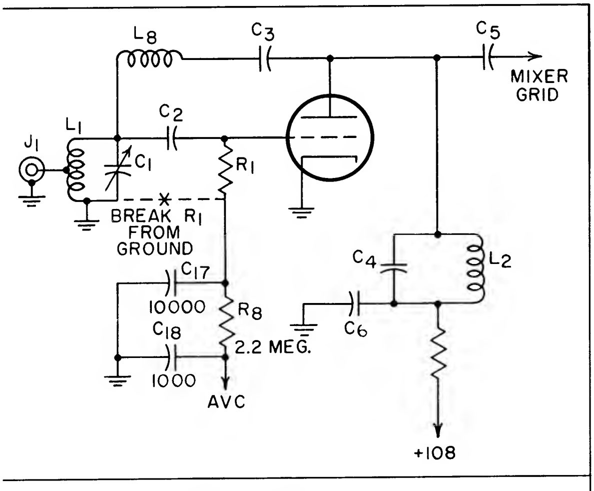

Figure 1: Modification for AVC. (Refer to the May, 1961, issue of HAM TIPS for complete schematic diagram and parts list for W2OKO's nuvistor two-meter converter.)

R_8—2.2 megohms, ½ watt

C_{17}—10,000 pf ceramic disc (Centralab type DD 103 or equivalent)

C_{18}—1,000 pf ceramic disc (Centralab type DD 102 or equivalent)

The agc voltage is obtained from the communications receiver with which the converter operates.

Figure 1 shows the modification of the grid circuit of the rf amplifier. The original grid resistor, R_1, is lifted from ground and rewired through the new R_8 to the spare contact on the Jones socket. C_{17} and R_8 are added as close to R_1 as possible, and C_{18} is added at the Jones socket.

The source of the agc voltage in the communications receiver is easily found by studying the receiver schematic and locating the agc line in the chassis wiring. The agc voltage should vary from zero at no signal to about 8 to 10 volts negative at maximum signal.

One word of caution is advisable. Some communications receivers use a fixed bias between grid and ground for the rf and if stages. If this bias is applied through the receiver agc circuit, it is always present. Thus, it would also be applied continuously to the converter and would greatly reduce its sensitivity. The receiver to be used must have zero voltage on the agc line in the absence of signals.

The effect of this simple circuit addition makes the change very worthwhile, especially in areas of strong signal reception.

BEAM POWER

For All Powers

Whether you're on SSB, AM, or CW—QRP or QRO—there's an RCA beam power tube for every amateur transmitter power level and for frequencies to 500 Mc and beyond.

Beam power tubes make it practical to build compactness into your rig. They do the job with fewer stages, less expensive components, fewer controls. RCA beam power tubes deliver the power with relatively low plate voltages. Thousands of commercial transmitters prove out these facts.

For more usable "transmitter watts" for your dollars, "socket-up" with RCA beam power tubes. Check the chart at right for the types you need—and order direct from your RCA industrial-tube distributor.

RCA's newest beam power tube types for use in ham radio.

Popular RCA "Beam" Power Tubes for Transmitter Application
(listed according to power-input ratings)

RCA Type	Class of Service	Max. Plate Dissipation Watts		Max. Plate-Input Watts■	Max. DC Plate Volts■	Max. Freq. For Full Input (Mc)	Max. Useful Freq. (Mc)	Heater (H) or Filament (F) Volts
		CCS	ICAS					
5763	CW AM	12	13.5	17 15	350 300	50	175	6.0 (H)
6417	Same as RCA-5763, except for heater voltage							12.6 (H)
2E26	CW SSB AM	10	13.5	40 37.5 27	600 500 500	125	175	6.3 (H)
2E24	Same as RCA-2E26, but has quick-heating filament							6.3 (F)
6893	Same as RCA-2E26, except for heater voltage							12.6 (H)
832A*	CW AM	15	—	50** 36**	750 600	200	250	6.3▲ (H) 12.6● (H)
807	CW SSB AM	25	30	75 90 60	750 750 600	60	125	6.3 (H)
6524*	CW SSB AM	20	25	85** 85** 55**	600 600 500	100	470	6.3 (H)
6850*	Same as RCA-6524, except for heater voltage							12.6 (H)
4604	CW	—	25	90	750	60	175	6.3 (F) quick-heating
6146	CW SSB AM	20	25	90 85 67.5	750 750 600	60	175	6.3 (H)
6883	Same as RCA-6146, except for heater voltage							12.6 (H)
7203 / 4CX250B	CW SSB AM	250	—	500 500 300	2000 2000 1500	500	—	6.0 (H)
813	CW SSB AM	100	125	500 450 400	2250 2500 2000	30	120	10 (F)
8072	CW SSB	100†	—	660 990§	2200 2200	500	500	12 to 15 (H)
8121	CW SSB	150	—	660 990§	2200 2200	500	500	13.5 (H)
8122	CW SSB	400	—	660 990§	2200 2200	500	500	13.5 (H)

*Twin-type **Total for both units ▲ For parallel-heater connection ● For series-heater connection ■ Maximum ratings for amateur use †May be higher, depending on cooling techniques § In "two-tone" operation. For a signal having a minimum peak-to-average power ratio less than 2, such as in "single-tone" operation, this value is 660 watts.

For technical data on any of these types, write RCA, Commercial Engineering, Harrison, N.J.

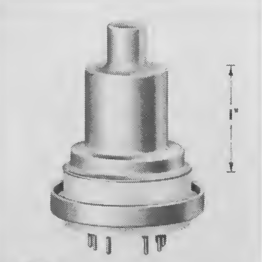

RCA-8072

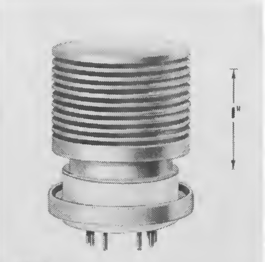

RCA-8121

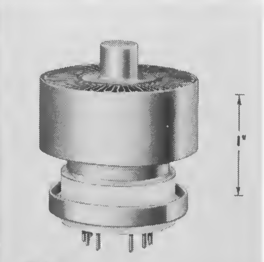

RCA-8122

From your local RCA distributor, headquarters for RCA receiving and power tubes.

RCA HAM TIPS is published by the RCA Electron Tube Division, Harrison, N. J. It is available free of charge from RCA distributors.

•

Harvey Slovik, Editor

F IT'S ELECTRONICS
ALL BARBEY'S FIRST

GEORGE D. BARBEY CO., INC.
Reading   Pottstown
Lancaster   Lebanon

WHEN MAILING
PLACE POSTAGE HERE

BLK. RT.

READING PA.
U.S. POSTAGE 02 ½
PB METER 314629

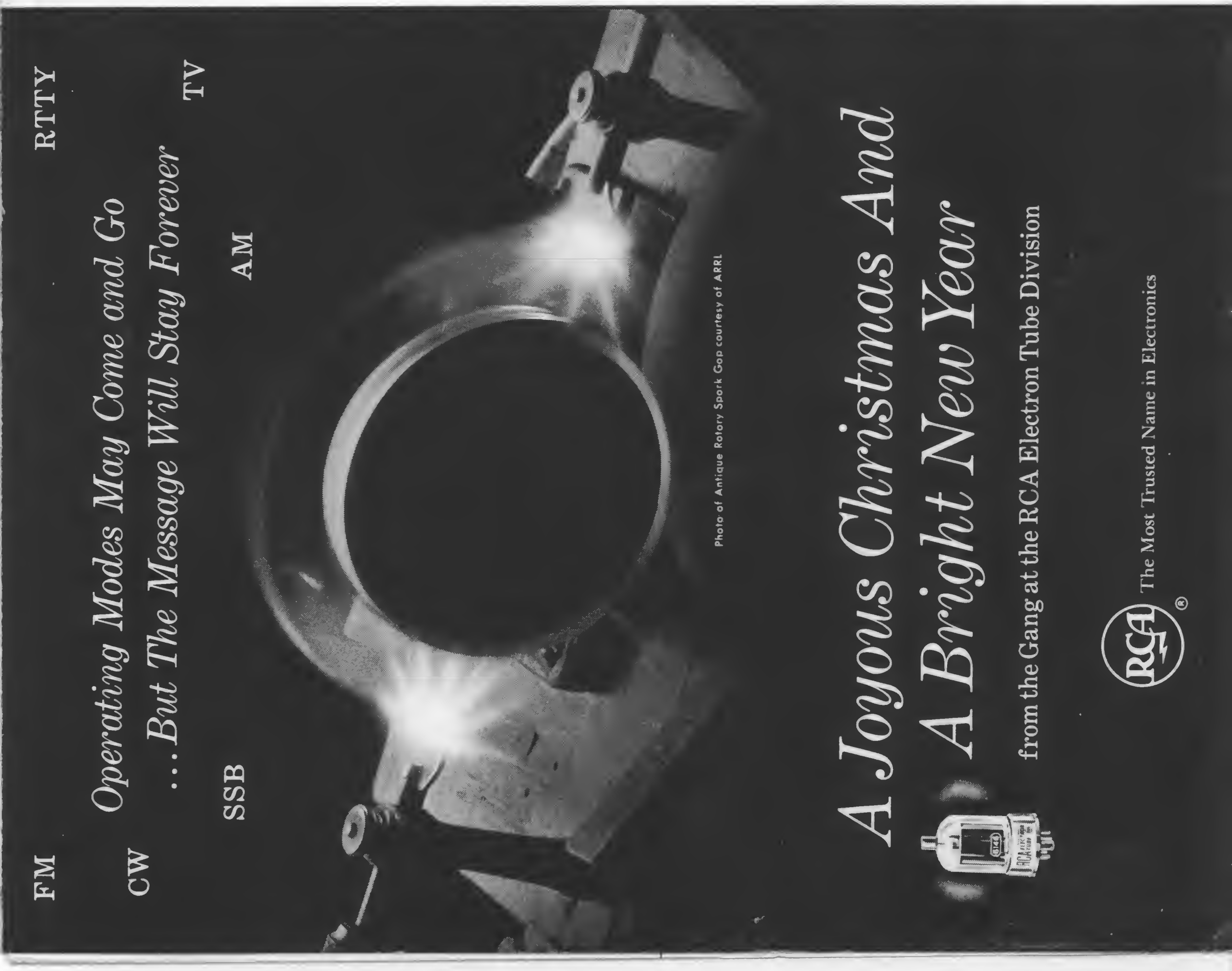

Photo of Antique Rotary Spark Gap courtesy of ARRL

HAM TIPS

A PUBLICATION OF THE RCA ELECTRON TUBE DIVISION

VOL. 22, NO. 1 ©1962, RADIO CORPORATION OF AMERICA SPRING, 1962

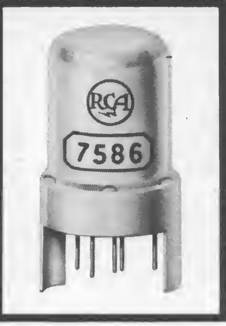

NUVISTOR TWO-METER TRANSMITTER

By R. M. Mendelson, W2OKO

RCA Electron Tube Division, Harrison, N. J.

Top view of W2OKO's two-meter transmitter designed around two RCA-7586 nuvistor triodes and a pair of RCA-7587 nuvistor tetrodes.

Announcement of a new tube usually starts the construction-minded ham searching for ways to take full advantage of its improvements over older tube types. And when a whole series of new types, such as RCA's nuvistor line, is introduced, the experimental possibilities become almost limitless.

To date, Ham Tips articles on nuvistor applications have been concerned solely with receiving circuits. (Consider the nuvistor two-meter converter and the nuvistor preamplifier, described respectively in the May, 1961, and September, 1961, issues.) Can the amateur make good use of these same receiving tubes in low-power transmitters? Yes! RCA nuvistors are ideal for miniaturized VHF mobile or fixed-station transmitting operation. These tubes have high plate-dissipation ratings for their small size; they are easily usable up to 400 megacycles; and they have the rugged construction required for mobile operation.

The transmitter featured in this issue points up the versatility of RCA nuvistors—and how easily they may be put to work as transmitting tubes. An RCA-7586 nuvistor triode is used in a conventional overtone crystal oscillator at 48 Mc. Unnecessary loading of the oscillator is prevented by operating the tube with no frequency multiplication. The second-stage 7586 triples the frequency to 144 Mc and provides the drive to the final stage. A pair of RCA-7587 nuvistor tetrodes used in the final amplifier can be operated with a power input of up to 7½ watts. The very low driving power for these tubes is easily supplied by the tripler stage. Screen-grid neutralization is used, but adjustment is not critical.

Figure 1 presents the complete schematic diagram and parts list for the nuvistor two-meter transmitter. Table I shows typical operating voltages and currents.

Construction

The entire transmitter is built on a 5- by 7-inch piece of copper or brass, so that a standard aluminum chassis may be used as the base cover. A smaller plate can be used without cramping the parts if a special cover is hand bent. (Refer to Figure 2 for the parts

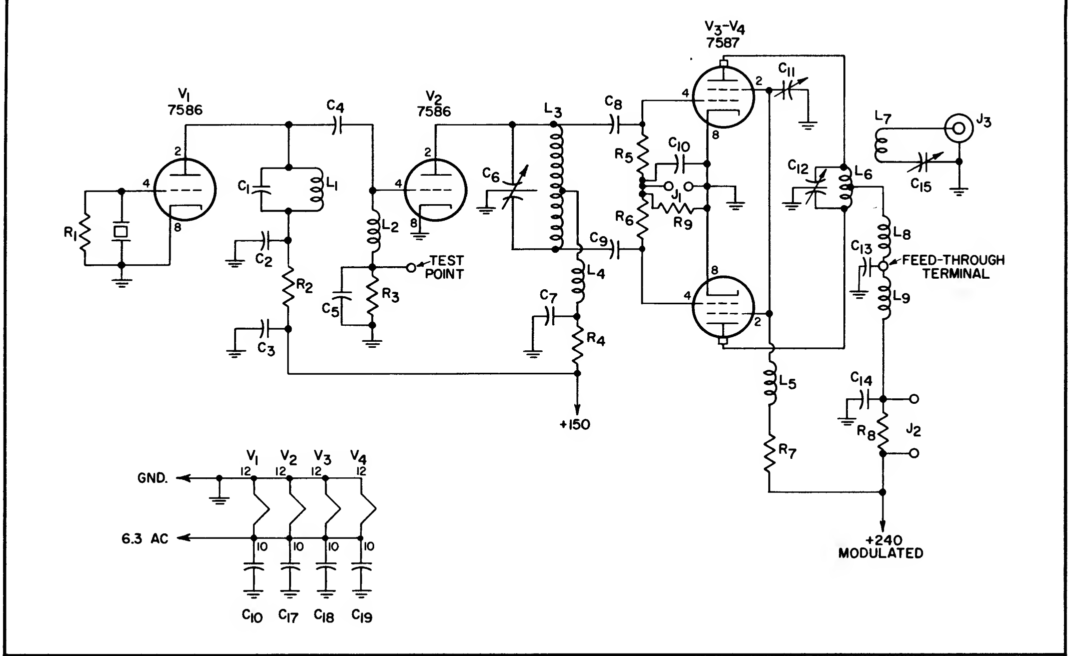

C_1—30 pf ceramic tubular (Centralab TCZ-30 or equiv.)

C_2, C_3—.01 μf ceramic disc (Centralab DD-1032 or equiv.)

C_4—50 pf ceramic tubular (Centralab TCZ-50 or equiv.)

C_5, C_7, C_{10}, C_{13}, C_{14}, C_{16}, C_{17}, C_{18}, C_{19}—500 pf ceramic tubular (Centralab DD-501 or equiv.)

C_6, C_{12}—2.7-10.8 pf butterfly air capacitor (Johnson 11MB11 or equiv.)

C_8, C_9—20 pf ceramic tubular (Erie TCO-20 or equiv.)

C_{11}—7-45 pf ceramic trimmer (Erie TS-E or equiv.)

C_{15}—3-32 pf air trimmer capacitor (Johnson 30M8 or equiv.)

J_1, J_2—Pair each, insulated phone tip jacks

J_3—Coax jack type BNC

L_1—4¼ turns #26 enameled wire, ⅜-inch diameter, spaced wire diameter on slug tuned form (CTC LS3 or equiv.)

L_2—RFC 7 μh (Ohmite Z50 or equiv.)

L_3—4 turns #16 bare wire, ½-inch diameter, ⅝-inch long, tapped at center

L_4, L_5, L_8, L_9—RFC 1.7 μh (Ohmite Z144 or equiv.)

L_6—5 turns #14 bare wire, ½-inch diameter, ⅝-inch long, tapped at center

L_7—1 turn #14 bare wire, ¾-inch diameter, insulated with "spaghetti"

R_1—100,000 ohm, ½ watt

R_2, R_4—5,600 ohm, ½ watt

R_3—15,000 ohm, ½ watt

R_5, R_6—6,800 ohm, ½ watt

R_7—27,000 ohm, ½ watt

R_8—100 ohm, ½ watt

R_9—1,000 ohm, ½ watt

Crystal socket

Feed-through terminal

Crystal—48.0-49.33 overtone (International Crystal Co. type FA5 or equiv.)

4 nuvistor sockets (Cinch No. 133 65 100.011)

1 socket (Jones type P308 AB or equiv.)

1 chassis, aluminum, 5″ x 7″ x 2″ (Bud AC402 or equiv.)

Figure 1: Schematic diagram and parts list.

layout that assures short leads and correct parts orientation. Also see Figure 3 for a sketch of the small bracket to be used in mounting the final tank circuit and output coaxial connector.)

Because of their small size, nuvistor sockets are clamped, not bolted, to the chassis by bending two lugs on the socket. After the chassis hole has been drilled, two notches for the lugs are hand filed to insure a tight fit of socket to chassis. For rf grounding, both socket lugs are soldered to the chassis plate.

Adequate rf bypassing is applied to all critical parts of the circuit. Because the reliability of nuvistors makes it unnecessary to retune the transmitter every time it is put into service, a permanent meter is not required. Rather, two pairs of jacks are used for plugging a temporary meter into the grid or plate circuits of the final. An eight-contact power socket provides extra contacts for future development.

The plate caps for the tetrode are made by bending a piece of piano wire into a tight-fitting one-turn coil. To keep lead inductance low, the leads to the plate tank capacitor are made from ¼-inch-wide copper ribbon. The one-turn output link is covered with a piece of "spaghetti" insulation and tightly coupled to the final tank coil.

Adjustment

The transmitter is very easy to tune. If all the coils have been wound to specification, there should be no trouble in finding the proper settings of the coil slug and of the

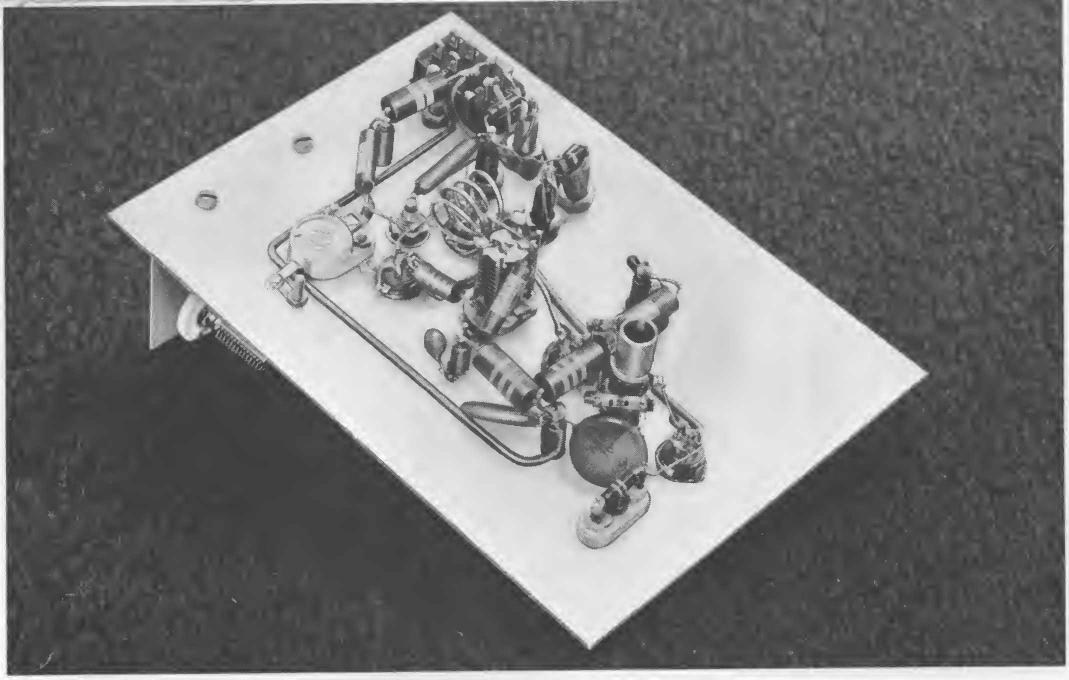

Bottom view of author's nuvistor two-meter transmitter.

tuning capacitors. Of course, a grid-dip meter makes tuning even easier.

To assure that the oscillator will start every time voltage is applied, follow this procedure: Plug in only the first RCA-7586 and the crystal; apply heater voltage and +150-volt plate voltage, and allow the tube to warm up. With a high-impedance voltmeter applied to the test terminal, adjust the slug in coil L_1 until oscillation starts (shown by voltage at the test point). Adjust for maximum voltage; then back the slug out to give a slightly higher tuned frequency. A reading of about 10 volts should be obtained.

Next, plug in the second RCA-7586 and the two RCA-7587's. Do not apply plate and screen-grid voltage to the final as yet. Plug a 5-milliampere meter into the grid jack pair, J_1, and tune C_6 for maximum grid current. A reading of between 2 and 3 milliamperes should be obtained.

Then, rotate the plate-tuning capacitor, C_{12}, through its entire range. There should be very little effect on the grid-current reading. In turn, slowly adjust the screen-grid bypass capacitor, C_{11}, while rotating the plate capacitor until a point is found at which the plate capacitor has no effect on the grid current. This adjustment is not critical.

Now that the final stage is neutralized, plug a 50-milliampere meter into the final plate-circuit pair, J_2; attach the antenna or dummy load, and apply +240 volts to the plate and screen-grid circuit. Tune the plate

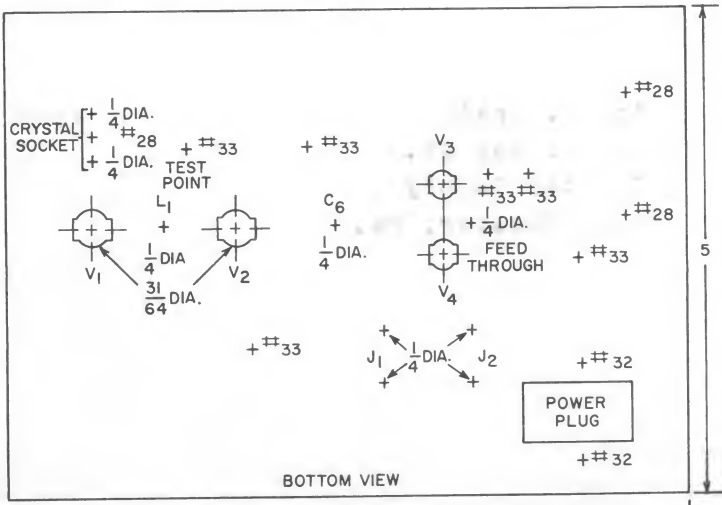

Figure 2 (at left): Bottom view of chassis plate (one-half actual size).

Figure 3 (below): Diagram for the final-stage mounting bracket.

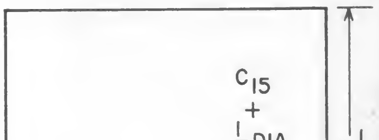

HAM TIPS NOW AVAILABLE ON SUBSCRIPTION BASIS

Radio amateurs consistently ask RCA how they may obtain each new issue of HAM TIPS, published quarterly. If you're not already receiving this publication regularly from your RCA Electron Tube Distributor, you may be interested in being added to RCA's new direct-mail list of HAM TIPS subscribers who reside in the United States and its possessions (including APO and FPO numbers).

A two-year subscription to HAM TIPS is now offered to you for the minimum charge of only $1.00 (one dollar) to cover postage and handling of the eight issues. All you need do is type or print your name and address on the "Subscription Request" form below; then mail this envelope with your check or money order (no cash or stamps, please) to:

Radio Corporation of America
Section 882
Harrison, New Jersey

When ordering, be sure to enclose your remittance—payable to the Radio Corporation of America.

HAM TIPS SUBSCRIPTION REQUEST

______________ **Date**

Gentlemen:

I wish to enter my name for a two-year subscription to HAM TIPS.

Enclosed please find my check or money order for $1.00, payable to the Radio Corporation of America.

NAME______________________________
(Please type or print)

STREET ADDRESS______________________________

CITY______________________ **ZONE**________ **STATE**______________

AFFIX
STAMP
HERE

RADIO CORPORATION OF AMERICA
SECTION 882
HARRISON, NEW JERSEY

TABLE I: TYPICAL OPERATING VOLTAGES AND CURRENTS

(All voltages are measured with respect to ground and may vary by 20%)

Voltage to ground	V_1	V_2	V_3, V_4
Plate	100	86	240 Volts
Screen Grid	—	—	75 Volts
Control Grid*	-9.5	-9.2	-15.1 Volts
Cathode	0	0	0 Volts
Currents			
Control Grid Final	—	—	2.3 Milliamperes
Screen Final	—	—	5.0 Milliamperes
Plate Final	—	—	32.0 Milliamperes

*Measured with vacuum-tube voltmeter. A low impedance meter will affect the circuit values.

tank for minimum plate current with capacitor C_{12}. The tuning capacitor, C_{15}, in the output link is for balancing out feed-line reactance to the antenna and should be adjusted for best output. (Use a standing-wave-ratio bridge, a field-strength meter, or even signal-reports from another station.) When fully loaded, a plate current of about 32 milliamperes should be obtained.

Conclusion

Only after using this transmitter will the operator realize the merits of nuvistor ruggedness and reliability. Long periods of operation, or even long periods of idleness, have no effect on the nuvistor transmitter. It will stay tuned and ready to work well whenever needed.

From your local RCA distributor, headquarters for RCA receiving and power tubes.

RCA HAM TIPS is published by the RCA Electron Tube Division, Harrison, N. J. It is available free of charge from RCA distributors.

•

Harvey Slovik, Editor

GEORGE D. BARBEY CO., INC.
Reading Pottstown
Lancaster Lebanon

WHEN MAILING
PLACE POSTAGE HERE

RCA
HAM TIPS
A PUBLICATION OF THE RCA ELECTRON TUBE DIVISION
VOL. 22, NO. 2 ©1962, RADIO CORPORATION OF AMERICA SUMMER, 1962

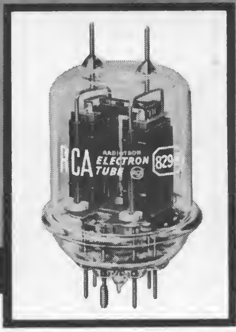

A 120-WATT 50-MC TRANSMITTER

By George D. Hanchett, W2YM
RCA Semiconductor and Materials Division
Somerville, N. J.

Although an active ham for more than three decades, the author had never tried transmission on six meters—until this year. Preparatory steps involved the usual search around the shack for parts suitable for a low-powered rig. W2YM decided that only the rf unit and antenna had to be built. Power supplies and the modulator were borrowed from a two-meter transmitter. The available power supplies limited the rig to a power level of about 100 watts. Because the author's location is in a Channel-2 area, the 120-watt 50-megacycle transmitter—well shielded throughout—is of proved straightforward design.

Front view of W2YM's 120-watt 50-megacycle transmitter. [Note the air-intake holes on the side of the blower (or bottom) chassis. They each measure ⅜ inch in diameter.]

Tube Locations and Circuit Considerations

Initial step in planning the 120-watt 50-megacycle transmitter was to lay out a three-stage rf section having a VFO-driven multiplier or crystal oscillator as the first stage and an RCA-829B as the final stage (see Figure 1).

An RCA-12BY7A oscillator-tripler was arranged so that it operates as a grid-plate oscillator in the crystal-control position. This oscillator uses 8-megacycle crystals and its output is tuned to the third harmonic. In the VFO position, the 12BY7A stage can be either an amplifier or a multiplier, and can be driven by a VFO with 8-, 12-, or 25-Mc output.

The oscillator-multiplier is capacitively coupled to an RCA-2E26 doubler which has a 50-Mc output. The 2E26 is link-coupled to the grids of the 829B. Link coupling was used because it facilitates coupling of a single-ended stage to push-pull grids.

In addition, the use of the double-tuned circuit provides extra selectivity in the grid circuit of the 829B amplifier and, thereby, reduces the possibility of harmonic interference to FM and TV reception.

The 829B final-amplifier plate circuit is tuned by a butterfly capacitor. The rotor section of this capacitor is ungrounded to improve balance. The antenna is link-coupled to the final tank circuit and is equipped with a 50-micromicrofarad capacitor which tunes out the inductance of the link winding.

Metering of different circuits is accomplished by use of a 0-1 milliampere meter. Suitable meter shunts are used in order to meter oscillator plate current (30 milliamperes full scale), doubler-grid current (2 ma full scale), doubler plate current (100 ma full scale), final grid current (30 ma full scale), final screen-grid current (100 ma full scale), and final plate current (300 ma full scale). A tuning switch is incorporated because it not only aids in the tune-up procedure, but also saves tubes and prevents possible damage to other components.

Construction

Completely contained in a 12- by 7- by 6-inch aluminum utility box, the 50-megacycle transmitter is fitted with an aluminum subchassis. This subchassis has small, ½-inch lips which are bent on the long sides of the chassis to provide stiffness.

Top view of inside of utility box shows details of grid and plate circuit for the 829B. Also note that a portion of the utility-box flanges have been removed to allow for insertion of subchassis.

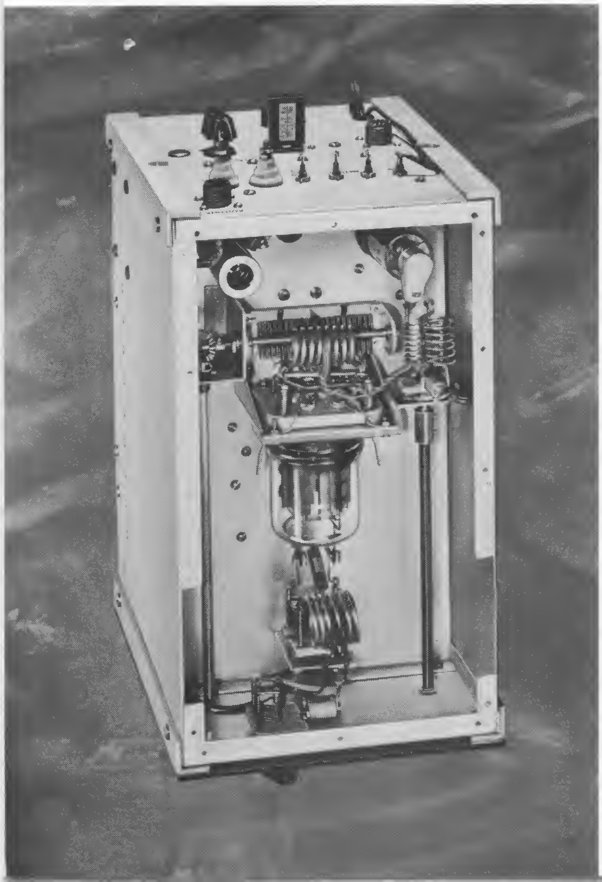

Half-inch tabs—bent on the front and rear of the chassis—serve as mounting brackets. One set of these tabs is bent up, the other down. Without this feature it would be impossible to insert the subchassis into the utility box.

For the same reason, two slots are cut in the top flanges of the utility box. These slots are visible in the photograph at left, which shows a top view of the transmitter.

A rectangular cutout at the rear of the subchassis fits around the power-lead filters which are mounted on the rear wall of the utility box. All leads entering or leaving the utility box are brought out through low-pass filters.

When complete, the utility box is mounted on a 12- by 7- by 3-inch aluminum chassis that serves as a bottom cover as well as a housing for the cooling fan and filament transformer. (The schematic for the bottom chassis is shown in Figure 2.)

A right-angle drive for the final-amplifier grid capacitor was made from two brass-beveled gears manufactured by the Boston Gear Works. These gears (stock item No. G462Y) have a $\frac{3}{16}$-inch shaft hole which must be enlarged to accommodate ¼-inch shafts. (The use of a lathe is recommended for this machining. If you do not have access to a lathe, a machine shop will do it for you at a nominal fee.) Each gear is secured on its shaft with two Allen-set screws spaced 90 degrees apart.

As shown in the sketch of the grid assembly (see Figure 3), the socket, grid coil, and neutralizing capacitors for the 829B are mounted on an aluminum bracket. The two top-mounting screws of the socket, together with a polyethylene strip, are used as feed-through connections.

The holes in the brackets must be enlarged so that the neutralizing capacitors do not short to ground. In the Figure 3 sketch, these holes are enlarged to ⅜ inch.

Note that, during construction, the grid leads of the 829B are criss-crossed. The neutralizing capacitors are small pieces of No. 12 wire which are close to the plate region of the 829B. Neutralization is accomplished by adjustment of the length of these wires, as described below.

The heater, screen-grid, and control-grid by-pass capacitors (as well as the output capacitor of the low-pass filters for the meter

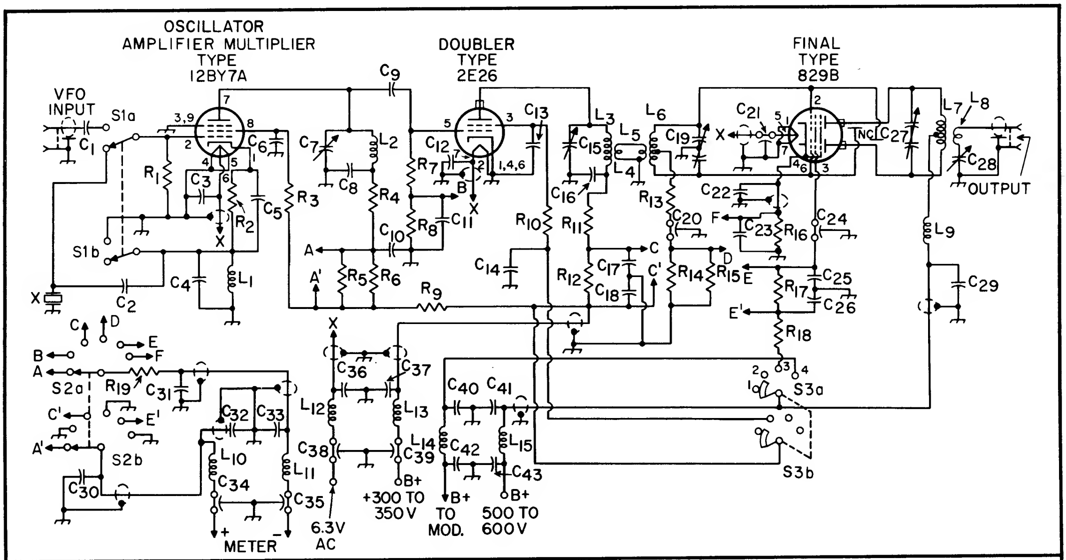

C_1—220 pf, mica, 500 volts

C_2—10 pf, mica, 500 volts

C_3, C_5, C_6, C_8, C_{10}, C_{11}, C_{12}, C_{13}, C_{14}, C_{16}, C_{17}, C_{18}, C_{22}, C_{23}, C_{25}, C_{26}, C_{30}, C_{31}, C_{32}, C_{33}, C_{36}, C_{37}—1,000 pf, disc ceramic, 1,000 volts

C_4—100 pf, mica, 500 volts

C_7, C_{28}—3.7-52 pf, variable, air gap 0.015 inch (Hammarlund HF-50 or equiv.)

C_9—47 pf, mica, 500 volts

C_{15}—5.2-30 pf, variable, air gap 0.045 inch (Hammarlund HF 30-X or equiv.)

C_{19}—5.0-28.5 pf double-section variable, air gap 0.045 inch (Hammarlund HFD 30-X or equiv.)

C_{20}, C_{21}, C_{24}, C_{34}, C_{35}, C_{38}, C_{39}—1,000 pf, feed-through, ceramic, 500 volts

C_{27}—4.8-27.3 pf, butterfly, variable, air gap 0.030 inch (Hammarlund BFC-25 or equiv.)

C_{29}, C_{40}, C_{41}, C_{42}, C_{43}—1,000 pf, disc ceramic, 3,000 volts

L_1—RF choke, 1 mh

L_2—10 turns of No. 20 tinned on ½-inch diameter form, winding length ¾ inch

L_3—5½ turns of No. 10 solid on ⅝-inch diameter, winding length 1 inch

L_4, L_5—2 turns of No. 20 plastic covered on ½-inch diameter

L_6—8 turns of No. 10 solid on ⅝-inch diameter, winding length 1½ inches

L_7—6 turns of No. 10 solid on ⅞-inch diameter, winding length 1 inch

L_8—2 turns on No. 14 Enam. covered with insulation tubing on ⅝-inch diameter

L_9, L_{10}, L_{11}, L_{13}, L_{14}, L_{15}—RF choke, 7 μh, 1,000 ma (Ohmite Z-50 or equiv.)

L_{12}—RF choke, 25 turns of No. 16 Enam. close-wound on ¼-inch diameter

NC—Neutralizing capacitors: No. 12, tinned wire (½-inch length placed in proximity of 829B plates); see text

R_1—100,000 ohms, 0.5 watt

R_2—120 ohms, 0.5 watt

R_3—33,000 ohms, 0.5 watt

R_4, R_8, R_{11}, R_{19}—1,000 ohms, 0.5 watt

R_5, R_{14}—47 ohms, 0.5 watt

R_6, R_{15}—130 ohms, 0.5 watt

R_7—47,000 ohms, 1 watt

R_9—3,300 ohms, 1 watt

R_{10}—10,000 ohms, 2 watts

R_{12}—10 ohms, 0.5 watt

R_{13}—56,000 ohms, 2 watts

R_{16}—3.3 ohms, 0.5 watt

R_{17}—33 ohms, 0.5 watt

R_{18}—15,000 ohms, 10 watts, wire wound

S_1—Crystal-VFO Switch; two-pole, two-position, wafer, non-shorting, rotary

S_2—Meter Switch; two-pole, six-position, wafer, non-shorting, rotary

S_3—Tuning Switch; 60-degree indexing (Centralab PA-304 or equiv.); two progressively shorting 30-degree wafers (Centralab PA-12 or equiv.), using every second contact

Miscellaneous—One crystal socket; one 829B socket; one octal socket; one 9-pin min. socket and shield; one 6- x 7- x 12-inch utility box; one 7- x 12- x 3-inch chassis; two ceramic feed-through insulators; two beveled gears, 90 degrees; one pilot light (green); one fuse; one cord set; one insulated plate cap (Millen or equiv.); two coaxial connectors (Amphenol or equiv.) **Note: All resistors have 10% tolerance.**

Figure 1: Schematic diagram and parts list of the rf section of W2YM's 50-megacycle transmitter.

leads, heaters, and 350-volt B+) are 0.001 μf FT feed-throughs. The high-voltage and modulator power-lead feed-throughs are ceramic units which are externally by-passed.

The tuning switch is constructed from a Centralab 60-degree detent assembly and two PA-12 progressively shorting wafers. In the first position, the screen-grid voltage is removed from both the 2E26 and the 829B, as well as the plate voltage to the external modulator. Advancing the switch in a clockwise manner activates each stage in turn until, in the fourth position, the complete transmitter is in operating condition.

As previously mentioned, the filament transformer and cooling fan are mounted in

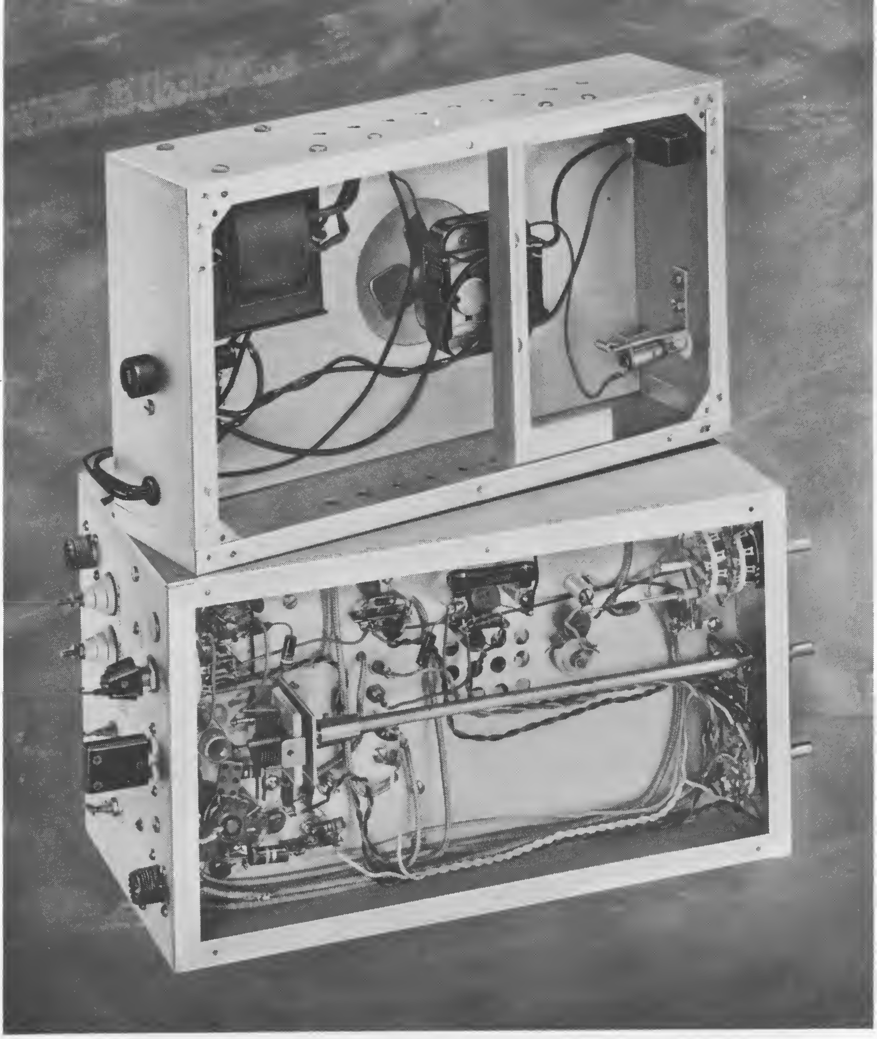

Bottom views of both utility box and blower chassis before assembly as combined unit. Note blower fan in the blower chassis. Also note that the 12 holes in the subchassis underneath the 829B allow for free flow of air around the tube.

the blower (or bottom) chassis (Figure 2). The cooling-fan blade is positioned in a 2¾-inch hole in the blower chassis. Holes drilled in the sides of this chassis provide an air inlet for the fan. As a result, air is freely circulated around the 829B.

Although the bottom cover is one of the original utility box covers, the top cover is a piece of perforated aluminum. The utility box and the blower chassis are held together by four ¾-inch angles which can be made from "do-it-yourself aluminum." The front panel is cut from ⅛-inch aluminum stock and fastened to the front aluminum angles of the transmitter. The panel may then be painted and lettered with decals.

In the transmitter, the 0-1 milliampere meter is not included because it is an integral part of the power supply unit used. Figures 4 and 5 show the power supplies that have been successfully used with this transmitter.

Transmitter Adjustments

With the top and bottom covers removed and the utility box detached from the blower chassis, make temporary connections to the heater circuit and ground the utility box to the blower chassis. Then, after checking all wiring, turn on the ac power to the fan and heater-filament transformer.

See that all tubes are properly lit. With the tuning switch in position No. 1, temporarily connect the 300-volt B+ to its proper terminal. Turn on the power and adjust C_7 for the maximum grid current of the 2E26 (approximately 1.0 to 1.2 milliampere). Turn the meter switch so that the oscillator plate current can be read. (This value should be between 12 and 18 milliamperes.) With a wave meter or grid-dip meter in the diode position, check that the plate circuit of the 12BY7A is three times the crystal frequency.

Shut off the plate supply and advance the tuning switch to position No. 2. Reapply the 300-volt B+ and quickly adjust C_{15} and C_{19} for maximum 829B grid current. Adjust the link coupling so that a grid current of approximately 10 milliamperes is flowing to the 829B grid. In making adjustments of the link coupling, be sure you turn off the B+

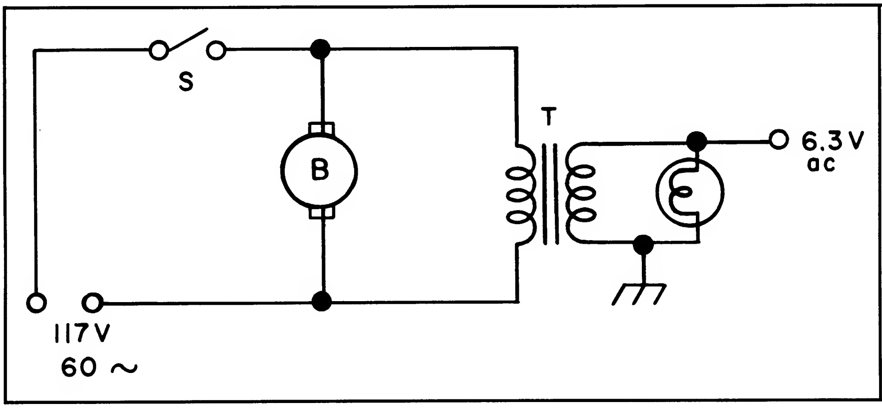

B—117-volt tube-cooling fan and motor (Allied Radio #72P715)

S—Toggle switch (SPST)

T—6.3-volt filament transformer (6 amperes)

Figure 2: Schematic diagram and parts list of 50-megacycle transmitter's bottom chassis.

voltage because 300 volts is exposed at the 2E26 plate coil. At this point, by using a wave meter or grid-dip meter, check again that these circuits are on 50 megacycles.

If a dip in the grid-current occurs with excitation while C_{27} is tuned, the 829B neutralization must be adjusted by cutting ⅛-inch lengths from the neutralizing wires until there is no noticeable change in the grid current as C_{27} is tuned through resonance.

Next, connect a load to the antenna connector of the transmitter. (If you do not have a non-inductive 50- or 75-ohm load, a 100-watt light bulb can be substituted.)

Temporarily attach the 600-volt high-voltage lead to its proper terminal. With the tun-

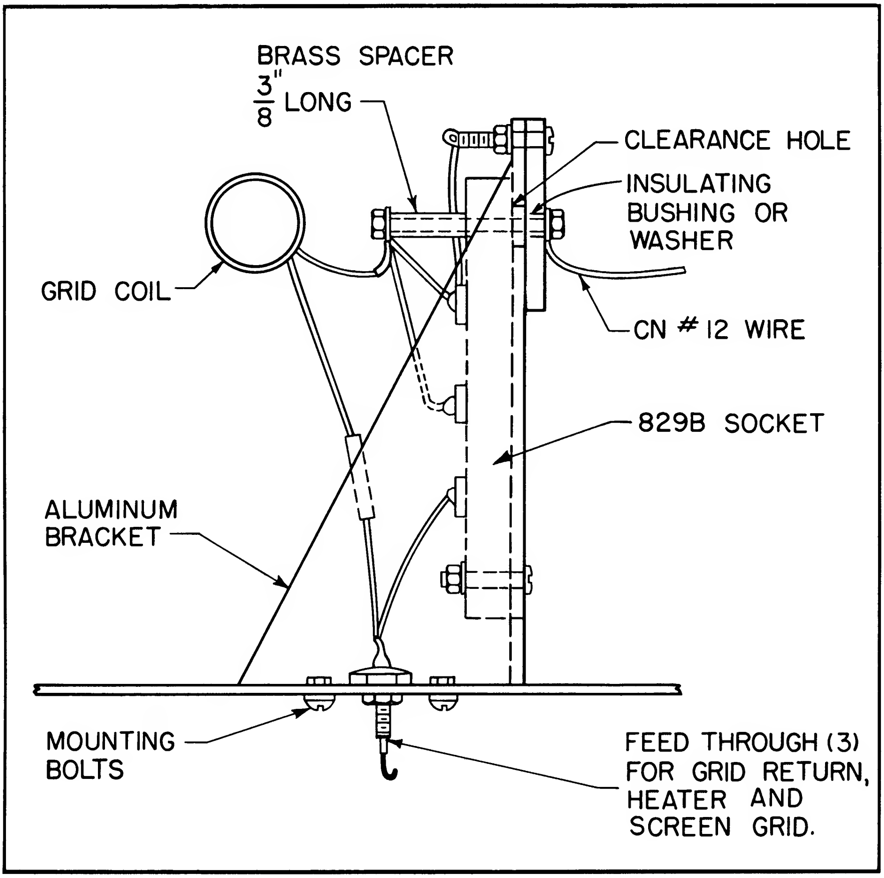

Figure 3: Sketch of grid assembly shows details of grid coil mounting and neutralizing capacitors.

ing switch in position No. 3 and the meter switch in the 829B cathode-current position, turn on the plate supplies. Quickly rotate the plate tank capacitor C_{27} for minimum dip. Now load the amplifier by adjusting L_8 and C_{28} until the total cathode current is approximately 200 milliamperes.

Return the meter to the 829B grid position and adjust the link coupling between the 2E26 and the 829B until the grid current is 15 milliamperes. Again return the meter switch to the cathode-current position and adjust the loading until the cathode current is approximately 240 milliamperes.

The 829B screen-grid current should now be between 25 and 30 milliamperes. If the screen-grid current is above 30 milliamperes, the screen-grid dropping resistor must be increased; if below 25 milliamperes, it must be decreased. It is unlikely, however, that you will require any adjustment of this dropping resistor.

The utility box now can be assembled to the blower chassis. The bottom cover, as well as the top perforated cover, also can be permanently attached. The transmitter and modulator leads can be connected permanently, too. What else? Connect a six-meter antenna and you are ready to go on the air.

A few words of precaution: Never attempt to modulate this transmitter unless the 829B is completely loaded. If the transmitter is not loaded, flash-over will occur, since the butterfly capacitor voltage breakdown ratings will be exceeded. An output in the order of 75 to 85 watts should be attained.

Tube Selection

Potential builders of this 120-watt 50-megacycle transmitter may be interested in knowing why particular tube types were selected. Here are the more important reasons:

- This writer was interested in attaining high reliability consistent with a moderate

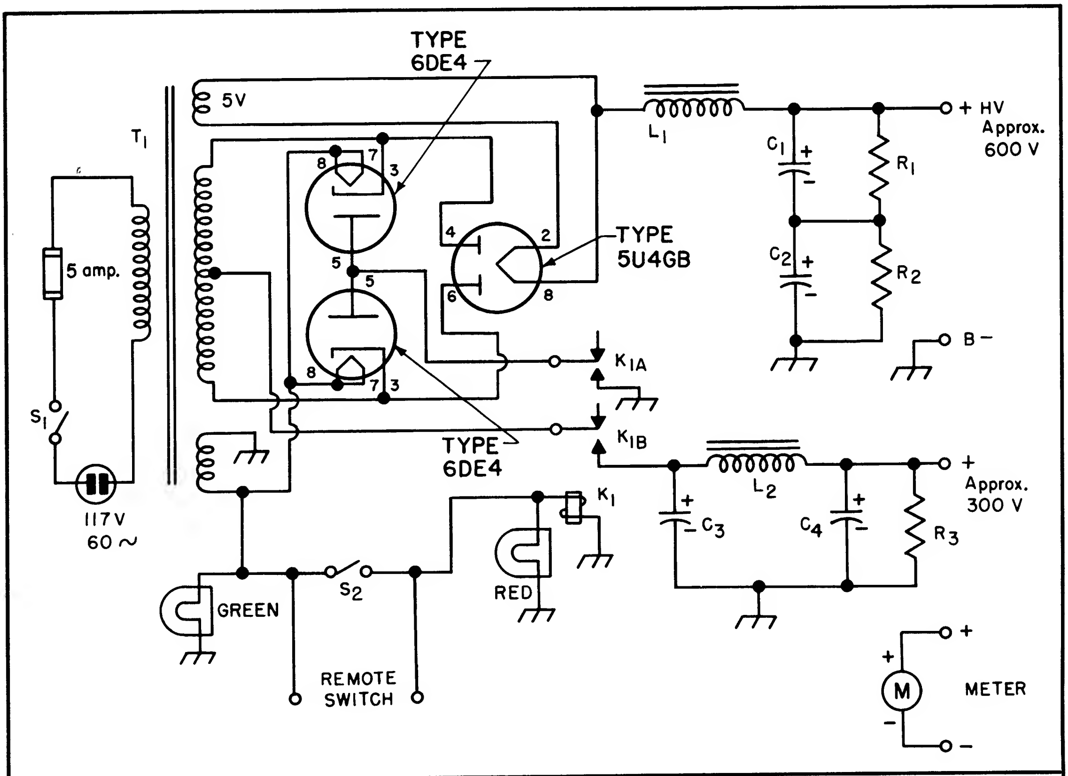

C_1, C_2, C_3, C_4—40 μf, 450 volts, electrolytic
K_1—Relay (Potter and Brumfield KA11AY or equiv.)
L_1—2.8 henry, 300 ma (Stancor C-2334 or equiv.)
L_2—4 henry, 175 ma (Stancor C-1410 or equiv.)
M—Milliammeter 0-1 ma dc
R_1, R_2—15,000 ohms, 10 watts
R_3—47,000 ohms, 2 watts
S_1—Toggle switch (SPST)
T_1—Power transformer (Stancor P-8159 or equiv.)

Figure 4: Schematic diagram and parts list of suggested power supply circuit using vacuum rectifier tubes.

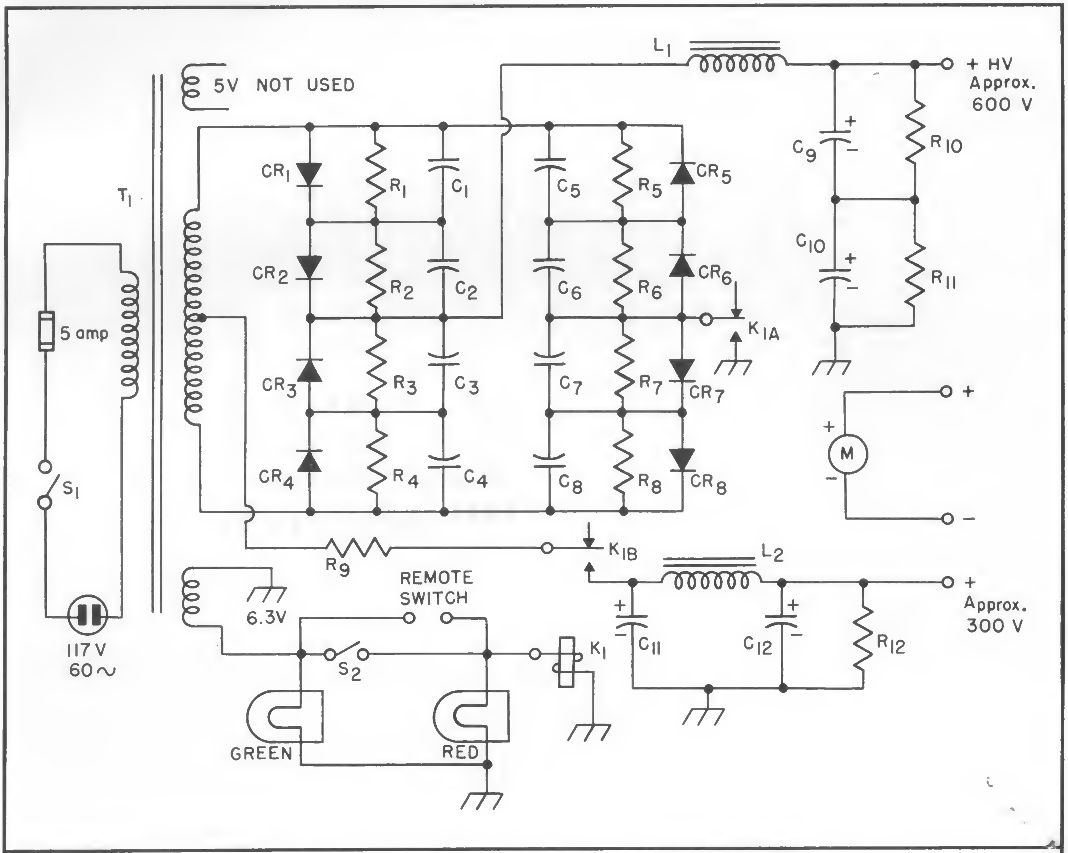

C_1, C_2, C_3, C_4, C_5, C_6, C_7, C_8—.001 μf, 1,000 volts, disc ceramic

C_9, C_{10}—40 μf, 450 volts

CR_1, CR_2, CR_3, CR_4, CR_5, CR_6, CR_7, CR_8—RCA-1N2864

K_1—Relay (Potter and Brumfield KA11AY or equiv.)

L_1—2.8 henry, 300 ma (Stancor C-2334 or equiv.)

L_2—4.0 henry, 175 ma (Stancor C-1410 or equiv.)

M—Milliammeter 0-1 ma meter, dc

R_1, R_2, R_3, R_4, R_5, R_6, R_7, R_8—100,000 ohms, 0.5 watt

R_9—47 ohms, 1 watt

R_{10}, R_{11}—15,000 ohms, 10 watts

R_{12}—47,000 ohms, 2 watts

S_1, S_2—Toggle switches (SPST)

T—Power transformers (Stancor P-8166 or equiv.)

Figure 5: Schematic diagram and parts list of suggested power supply circuit using silicon rectifiers.

cost. The tubes chosen have been in production for many years and have demonstrated excellent life characteristics.

- Instead of the 829B, two 6146's could have been used for the final stage. However, the spacing and construction would have been much more difficult. In addition, while the 6146 would have cost less, the difference in price between this tube and the one used was not great enough to justify the extra mechanical problems that would have been brought about as a result.
- By replacement of the 2E26 with its 12-volt version (the 6893), and by rewiring of the 12BY7A and 829B, the transmitter can be used—with 12-volt heaters—in mobile installations.

All in all, the tube line-up selected appears to provide the best balance of power, cost, and reliability.

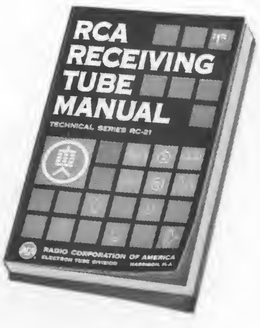

From your local RCA distributor, headquarters for RCA receiving and power tubes.

RCA HAM TIPS is published by the RCA Electron Tube Division, Harrison, N. J. It is available free of charge from RCA distributors.

•

Harvey Slovik, Editor

IF IT'S ELECTRONICS
CALL BARBEY'S FIRST

GEORGE D. BARBEY CO., INC.
Reading Pottstown
Lancaster Lebanon

BLK. RT.

WHEN MAILING
PLACE POSTAGE HERE

READING PA.
U.S. POSTAGE 02½
PB METER 314629

TUBES SHOWN ACTUAL SIZE

QRO plus!

RCA Announces three Ceramic-Metal Beam Power Tubes for Higher-Efficiency Operation on Amateur UHF

You are looking at three of the most remarkable beam power tubes ever offered for amateur high-band operation. Ceramic-Metal construction makes them the toughest you can get for mobile service . . . provides increased heat-handling capacity—reduces tube size for compact UHF transmitter designs. High-perveance design enables you to achieve UHF power output at relatively low plate voltages.

RCA-8072, RCA-8121, and RCA-8122 are manufactured with the RCA exclusive grid-making technique for precision grid alignment and exceptional structural stability. Each tube features a 13.5-volt heater. See chart at right for plate voltages, useful power outputs, and operating frequencies for typical CW operation.

When you build or buy for high-band operation—SSB, AM, or CW—you'll get top results with an RCA Ceramic-Metal beam power tube. See your RCA Industrial Tube Distributor for the types you need.

NEW RCA CERAMIC-METAL TUBES FOR AMATEUR USE

RCA No.	Type of Cooling	Plate Volts	Freq. Mc.	Useful Power Output Watts
8072	Conduction	700	50 175 470	110 105 85
8121	Forced-Air	1500	up to 500	235
8122	Forced-Air	2000	up to 500	300

For a technical bulletin on RCA-8072, RCA-8121, or RCA-8122 write: Commercial Engineering, RCA Electron Tube Division, Harrison, N. J.

RCA® THE MOST TRUSTED NAME IN ELECTRONICS

HAM TIPS

A PUBLICATION OF THE RCA ELECTRON TUBE DIVISION

VOL. 22, NO. 3 ©1962, RADIO CORPORATION OF AMERICA FALL, 1962

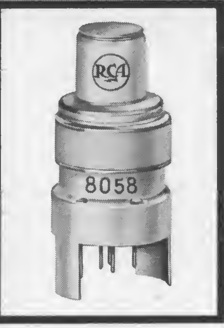

A NUVISTOR CONVERTER FOR 432 MEGACYCLES

By J. M. Filipczak, K2BTM

RCA Electron Tube Division, Harrison, N. J.

New performance possibilities in the field of amateur receiver equipment resulting from the introduction of RCA nuvistors have led increasing numbers of hams to explore the various frequencies which might fully utilize the wide capabilities of these unique tubes. After achieving notable successes in one area, the author—like many of his fellow hams—was encouraged to proceed with experimentation in another. Excellent results with nuvistor converters for 144 and 220 megacycles in the VHF band soon prompted him to investigate designs for the UHF band. In the following article, he reports on a nuvistor converter for 432 megacycles—a highly dependable unit which "... has produced many hours of enjoyable QSO's."

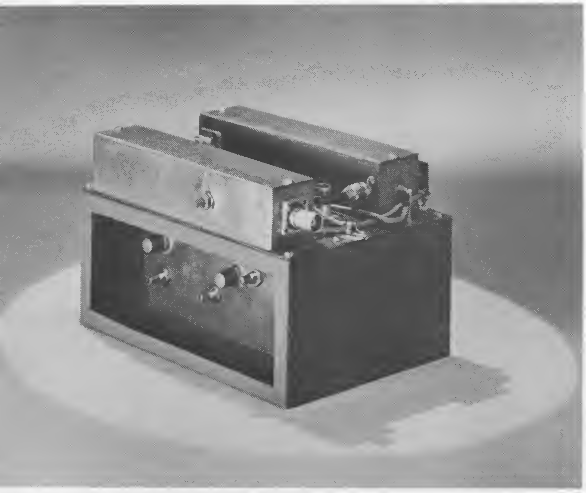

Front view of K2BTM's 432-Mc nuvistor converter. (Note how portion of chassis has been removed to facilitate final adjustments and additional cooling of oscillator-multiplier section.)

Description

This article describes a nuvistor converter for the 432-megacycle UHF band. As shown in the schematic diagram (Figure 1), the converter has two rf amplifier stages. Both stages employ the RCA-8058, a double-ended high-mu nuvistor triode which was announced commercially early in 1962.

This nuvistor type has been used successfully in cathode-drive amplifier service at frequencies up to 1200 Mc. Although its cost is somewhat higher than other nuvistor types, it is inexpensive when compared with other industry vacuum tubes capable of operating up to 1200 Mc.

Demonstrating excellent stability over a wide range of frequencies, the 8058 is designed to provide high gain with low noise in cathode-drive amplifier service. It is particularly suited to such service because the peripheral lugs used for indexing are also used as the connections to the grid. Further-

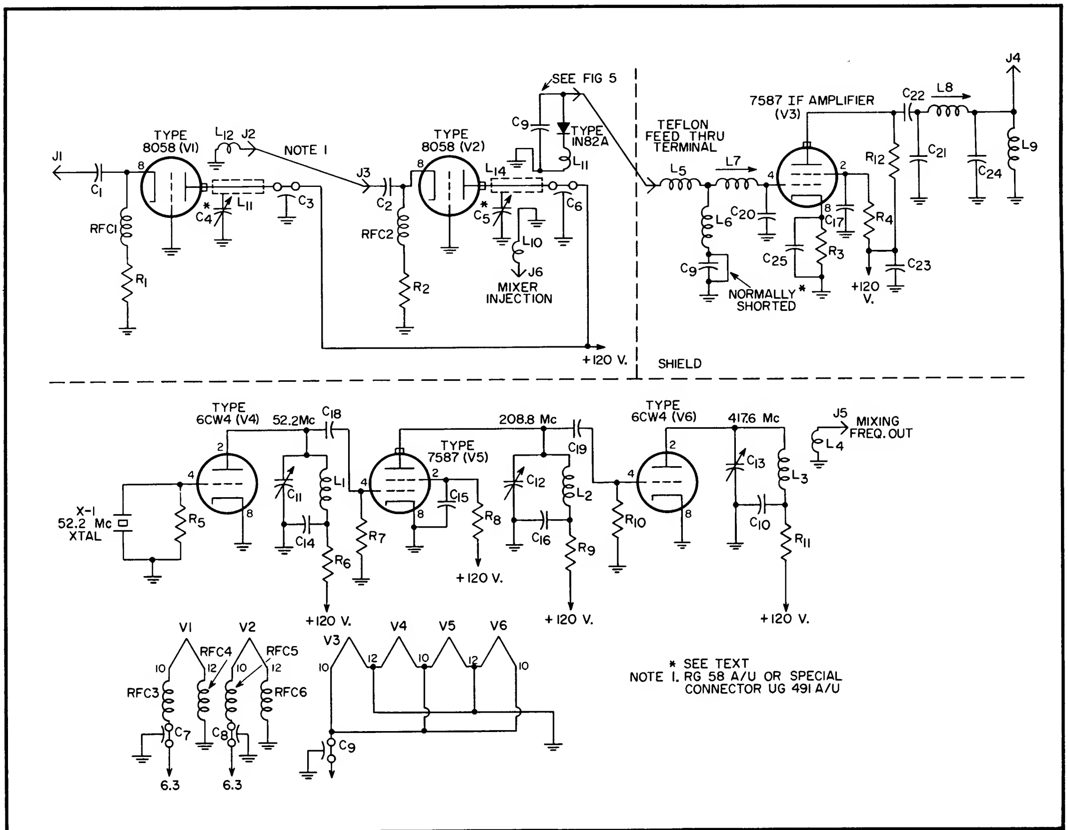

C_1, C_2—100 pf, ceramic tubular (Centralab TC2 or equiv.)
C_3, C_6, C_7, C_8, C_9—1,000 pf, feed-thru (Erie 2404)
C_4, C_5—See Figure 3
C_{10}—500 pf, silver button (Erie 370CB-501K or equiv.)
C_{11}—20 pf, miniature (E. F. Johnson 20M11)
C_{12}—15 pf, miniature (E. F. Johnson 15M11)
C_{13}—5 pf, miniature (E. F. Johnson 5M11)
C_{14}, C_{15}, C_{16}, C_{17}—500 pf, disc ceramic (Centralab DD501 or equiv.)
C_{18}, C_{19}—5 pf, ceramic tubular Centralab TCN or equiv.)
C_{20}—5 pf, N.P.O. ceramic (Centralab DT2 or equiv.)
C_{21}—15 pf, N.P.O. ceramic (Centralab DT2 or equiv.)
C_{22}, C_{23}—1,000 pf, disc ceramic (Centralab DD102-G or equiv.)
C_{24}—100 pf, silver mica (Arco Electronics CM-15 or equiv.)
C_{25}—.003 disc ceramic (Centralab DD302 or equiv.)
J_1, J_2, J_3, J_4—BNC-type connector (UG290AU)
J_5, J_6—RCA-type phono connector
L_1—6 turns of No. 20 on ½-inch diameter (B&W 3003)
L_2—1 turn of No. 18 enamelled wire on ½-inch diameter
L_3—See Figure 3
L_4—Hairpin loop, No. 16 enamelled wire cut to ½-inch length
L_5, L_9—9 turns of No. 26 enamelled wire, close wound on ¼-inch diameter poly form
L_6—18 turns of No. 26 enamelled wire, close wound on ¼-inch diameter poly form
L_7—28 turns of No. 26 enamelled wire, close wound on ⅜-inch diameter slug-tuned form (CTC-PLST or equiv.)
L_8—20 turns of No. 26 enamelled wire, close wound on ⅜-inch diameter slug-tuned form (CTC-PLST or equiv.)
L_{10}—Hairpin loop, No. 18 enamelled wire cut to ½-inch length
L_{11}—No. 18 insulated wire, ¾-inch length, bent into loop and coupled approximately ⅛-inch from L_{14}
L_{12}—Same as L_{11}, except for coupling of loop to L_{13}
L_{13}, L_{14}—See Figure 3
R_1, R_2—56 ohm, ½ watt
R_3—68 ohm, ½ watt
R_4—47,000 ohm, ½ watt
R_5—47,000-to-100,000 ohm, ½ watt (See text)
R_6—4,700 ohm, ½ watt
R_7, R_{10}—100,000 ohm, ½ watt
R_8—120,000 ohm, ½ watt
R_9—1,000 ohm, ½ watt
R_{11}—22,000 ohm, ½ watt
RFC_1, RFC_2, RFC_3, RFC_4, RFC_5, RFC_6—Ohmite Z460 rf choke
Miscellaneous—One feed-thru Teflon insulator; crystal socket; one crystal 52.2-Mc overtone (International Crystal Company type FA5); six nuvistor sockets (Cinch No. 133 65 100.011); one chassis, aluminum, 5-by-7-by-3 inches (Bud AC429 or equiv.)

Figure 1: Schematic diagram and parts list of K2BTM's 432-Mc converter.

more, three base-pin connections for the cathode reduce lead inductance and provide flexibility in circuit layout.

The 8058 is especially useful in equipment which requires tubes having low drain and exceptionally high uniformity of characteristics. The double-ended construction of this nuvistor provides a high degree of isolation between the input and output circuits.

As indicated in the schematic, the second rf amplifier (V2) is identical to the first but is followed by a crystal mixer mounted on the chassis. Both stages use quarter-wavelength shorted plate lines. A noise figure of 7 db and a gain of 15 db at 450 megacycles have been measured for the first rf stage. In operation, signals which are generally hidden in the noise level of other converters are easily detected with this converter.

The output of the crystal mixer is link-coupled to a low-noise bandpass if amplifier which uses the RCA-7587, a general-purpose sharp-cutoff nuvistor tetrode. This nuvistor type is designed for use in a wide variety of small-signal applications requiring compactness, low current drain, relatively low-voltage operation, exceptional uniformity of characteristics from tube to tube, and ability to withstand severe mechanical shock and vibration.

Performance and stability of this tetrode stage have been most satisfactory. The gain of the if amplifier is about 20, and its output is fed to a receiver which tunes from 14 to 18 megacycles. A 52.2-megacycle overtone crystal in the oscillator-multiplier circuit multiplies the signal frequency up to the final injection frequency of 417.6 megacycles.

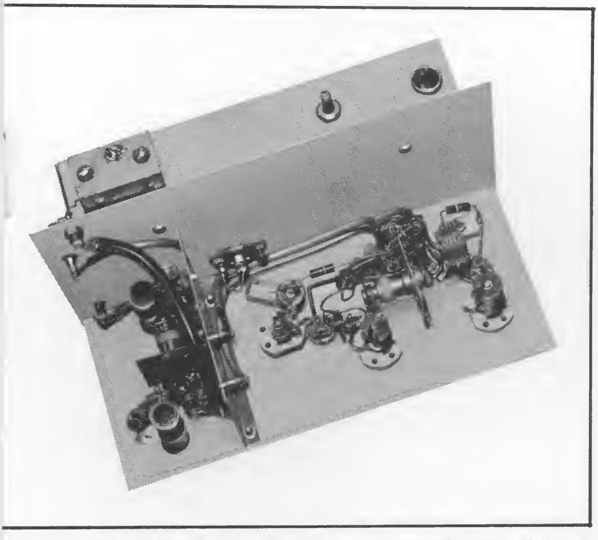

Figure 2a: Bottom view of converter showing if stage (left of shield) and oscillator circuits.

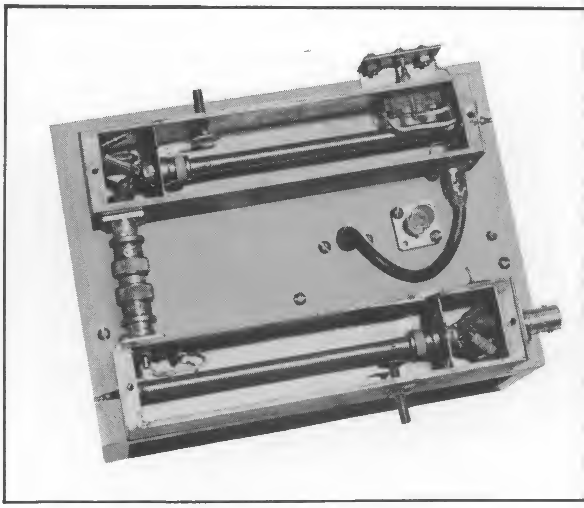

Figure 2b: Top view showing two rf amplifiers.

This frequency multiplication is accomplished with two RCA-6CW4 high-mu nuvistor triodes and a 7587 tetrode. The 6CW4 features high-gain capabilities which are achieved by very high transconductance and excellent transconductance-to-plate-current ratio (12500 micromhos at a plate current of 8 milliamperes and a plate voltage of 70 volts). The design of the oscillator-multiplier insures an adequate amount of injection frequency free of unwanted frequencies.

Power requirements for the converter are 120 volts at about 40 milliamperes and 6.3 volts ac at 950 milliamperes for the heaters.

Circuit Design

The first and second rf stages use the 8058 nuvistor in a grounded-grid (cathode-drive) configuration. The 8058 is especially suitable for this operation because the ground connection to the grid is made when the tube is inserted into the socket. Optimum performance of both rf stages occurs at about 430 megacycles; only a slight drop in gain occurs at 420 and 450 megacycles. Coupling from the antenna is through C_1 to the cathode of V1. The heaters are isolated above ground by rf chokes to provide stable operation. Oscillation has not been experienced in either stage.

As previously mentioned, the plate lines are quarter-wavelength shorted lines tuned by a small copper disc capacitor at the plate end. Plate voltage is fed to the line at the rf ground end through a 1000-picofarad capacitor. The

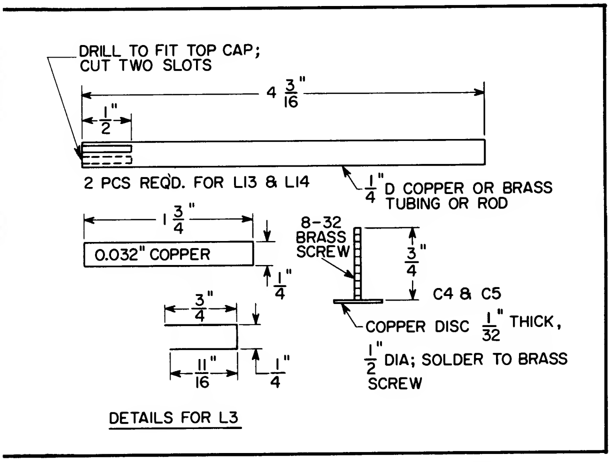

Figure 3: Detailed view of variable capacitors and inductors in rf stages.

two amplifiers are connected with a double BNC connector. Instead of this double connector, coaxial cable with conventional BNC fittings can be used.

The 1N82A crystal mixer is easy to construct, and was selected in preference to other types because it can take a considerable amount of rf voltage from the transmitter before burning out. Nevertheless, precautions should be taken for cutting off B+ during transmission to prevent damage to the rf circuits and the crystal mixer.

The output impedance of the crystal is matched to the input of the 7587 nuvistor (V3) by the coupling network (L_5, L_6, and L_7). Although this bandpass-coupling network is designed to operate at a frequency of 14 to 18 megacycles, slight retuning of coils (L_7, L_8) is required when tuning 16 to 18 megacycles. During normal operation, the capacitor C_7 is shorted to ground. During initial operating adjustments of the converter, the short across C_7 is removed, and a milliampere meter is placed in series with this point and ground. As a result, the crystal current can be measured and adjusted for normal operation. Noise measurements indicate that overall noise figure of the 7587 is less than other equivalent tubes.

Because the oscillator-multiplier circuit is of conventional design, no trouble should be encountered if good high-frequency wiring techniques are used. The 6CW4 (V4) oscillator stage is a harmonic overtone crystal circuit. Although slightly higher in cost than other crystals, overtone crystals are more accurate. Slight shifts in crystal frequency can be troublesome when multiplying to 417 megacycles. Because a number of receivers can tune below 14 megacycles and above 18 megacycles, a slight shift in the injection frequency can be compensated for.

When the 52.2-megacycle crystal in the grid circuit of the 6CW4 (V4) is oscillating, the plate circuit should be tuned to 52.2 megacycles. The high-value grid resistance (around 100,000 ohms) prevents excessive crystal current flow. Most active harmonic crystals oscillate readily with 100,000-ohm grid resistance. If this resistance is too high, however, it can be reduced to 47,000 ohms without causing excessive crystal current flow.

The next stage (V5)—a 7587 nuvistor tetrode—operates as a quadrupler and multiplies the frequency to 208.8 megacycles. The plate circuit is a single turn of #18 wire (½-inch diameter). The Q of this coil is sufficiently high to reject unwanted frequencies. This stage and the next doubler stage require extreme care in layout so that short direct connections can be made. Figures 2a and 2b show the positions of the components in these two stages.

The next nuvistor triode stage doubles the frequency to 417.6 megacycles. The plate-circuit inductance (L_3) is a short piece of copper bent into the shape of a "U." Construction details of this tank circuit and the other coil assemblies are shown in Figure 3.

The 417.6-megacycle injection frequency is link-coupled to the mixer stage through a short piece of 50-ohm coaxial cable. The coupling loop L_{10} is about 1/16 to ⅛ of an inch from L_{14}.

Mechanical Description

A chassis measuring 5-by-7-by-3 inches is used as the enclosure for the converter. The circuit is constructed on a flat piece of flashing copper with a shield separating the oscillator-multiplier from the if amplifier. The top plate is also 5-by-7-by-3 inches and is fastened to the aluminum chassis which forms the base for the two rf lines. One side of the aluminum chassis is cut out to facilitate tuning of the oscillator-multiplier circuits as well as the coils in the if amplifier. Figure 2 shows the position of the shields.

Construction of Quarter-Wavelength Lines

The chassis is made of 1¼-inch-square extruded brass. One side is cut out, except for two end ribs which are required for mounting the cover. The plate on which the socket is mounted is made of flashing copper and soldered into position inside the brass extrusion. Position of components and dimensions for the lines are shown in Figures 2 and 4.

The crystal mixer is coupled to the line by means of coupling loop L_{11}, which is spaced $\frac{1}{8}$ to $\frac{3}{16}$ inch from the plate line. The ungrounded end of this loop is connected to a tube pin removed from an old octal tube. This pin is force-fitted into an insulating block mounted on the chassis. Details for this construction are shown in Figure 5. This arrangement does not require any soldering at either end of the crystal diode. The L-shaped bracket is made to a close tolerance, and permits electrical contacts to be made at either end of the crystal without soldering.

By the addition of another piece of copper and one layer of Teflon sheet 0.010-inch thick, the L-shaped bracket also becomes capacitor C_9, having a capacitance of 45 picofarads. The mixing frequency is injected to the plate line of the second rf amplifier by the coaxial cable, both ends of which use a "phono-type" jack.

The size of the mixer-coupling loop (L_{10}) determines the amount of crystal current. A piece of wire, approximately $\frac{1}{2}$-inch in length, should be formed into a small loop. One end of this loop is connected to the phono socket and the other end is soldered to the chassis. Adjustment of the distance of the loop to the plate line determines the amount of injection voltage to the mixer and also the mixer crystal current flow. Precaution should be taken because excessive injection voltage may result in reception of signals outside the band. Optimum adjustment of the mixer is required to eliminate unwanted frequencies.

Adjustment Procedure

The oscillator-multiplier is adjusted first for normal operation. A grid-dip meter is a very useful instrument and is considered a necessity when building converters such as the one discussed here. Insert V4 (the 6CW4 oscillator) into its socket. Temporarily connect a milliammeter (10 milliamperes full scale) in series with the 4700-ohm resistor in the oscillator plate circuit. Apply 120 volts B+ and tune C_3 until a sharp "kick" in current on the milliammeter indicates that the circuit is oscillating. Couple the grid-dip meter near L_1 and read the frequency (which should be the frequency marked on the crystal, i.e., 52.2 megacycles). The stage should oscillate readily with an active crystal; if it does not, reduce the value of the grid resistor until oscillation is obtained. It is not advisable to go lower than 47,000 ohms because too much crystal current flow may cause the crystal to heat and, as a result, drift in frequency.

Remove the milliammeter and solder the 4700-ohm resistor back into the circuit. Insert V5 (7587 quadrupler) into its socket. Apply B+ and couple the grid-dip meter near L_2 and adjust C_4 for maximum output at 208.8 megacycles. Place V6 (6CW4 doubler) into its socket. (This stage may present an adjustment problem because most grid-dip meters used by ham operators do not cover frequencies above 220 megacycles.) If a grid meter is not available to measure 418 megacycles, adjust C_5 for maximum mixer crystal current (1.0 to 1.5 milliamperes maximum).

After a signal generator or antenna system with a characteristic impedance of 50 ohms is connected to the first rf stage and the receiver is tuned to 15 megacycles, tune C_4 and C_5 for maximum noise and crystal current. If the crystal current is more than 1.0 milliampere, bend the injection loop (L_{10}) toward the chassis until the crystal current measures beween 0.6 and 0.8 milliampere. At this time, trim the oscillator-multiplier circuits for maximum noise signal.

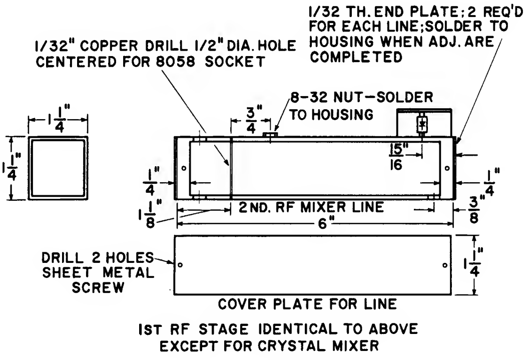

Figure 4: Construction details for two rf amplifiers.

The if amplifier can now be checked for operation and performance. Remove the connection to the crystal and connect a signal generator to the grid of the 7587 mixer. Response should be fairly flat over the 14-to-16-megacycle range. Tuning of the generator over the 14-to-18-megacycle range requires some peaking of the if coils (L_7, L_8). If no generator is available, noise from the rf amplifier and the mixer can be used to peak the coils.

No oscillation should be observed when a properly matched antenna is connected to the first rf stage and C_1 and C_2 are tuned for maximum noise. If oscillation does occur, the coupling loops (L_{12}, L_{11}) in the rf amplifier probably are coupled too loosely.

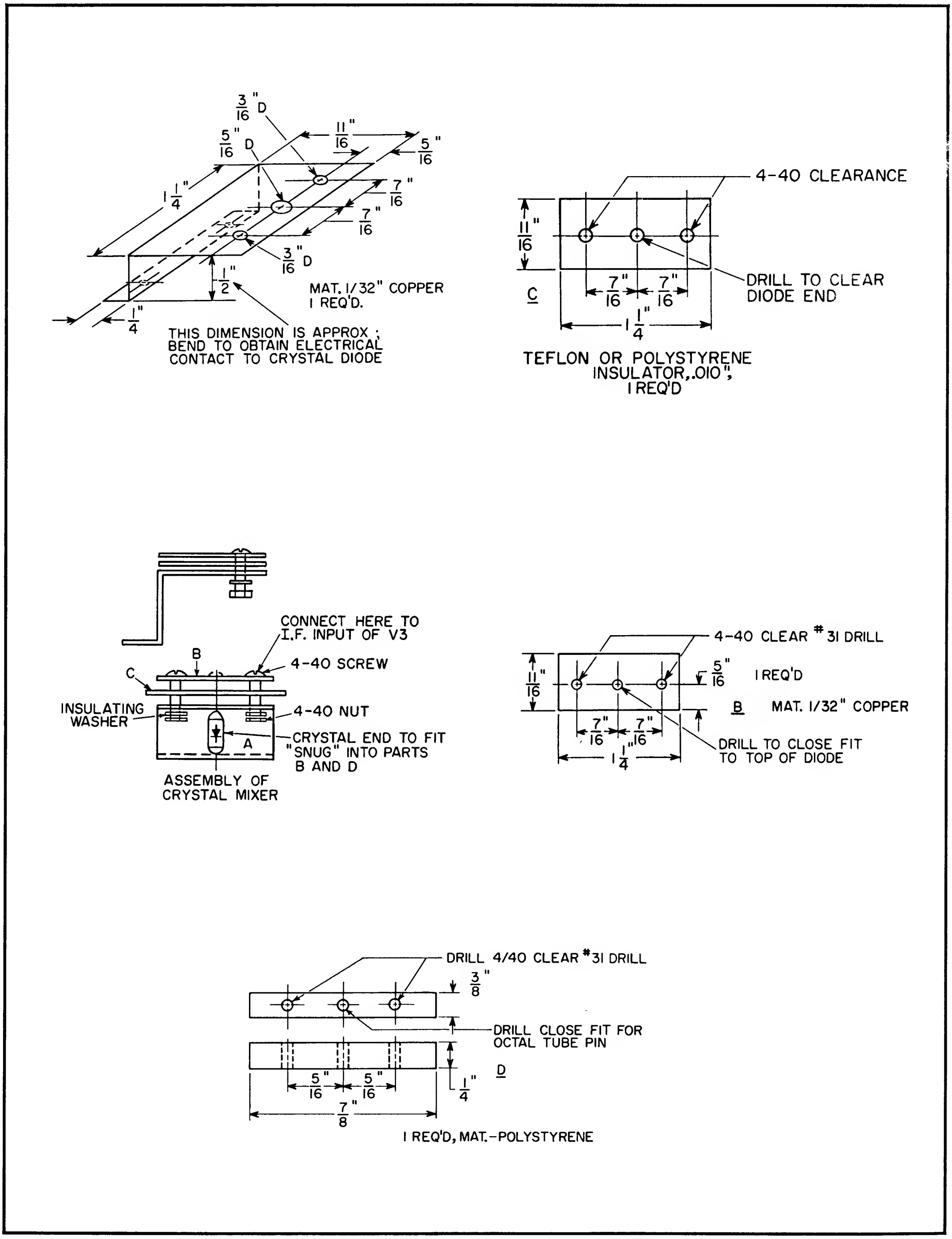

Figure 5: Construction for crystal mixer circuit.

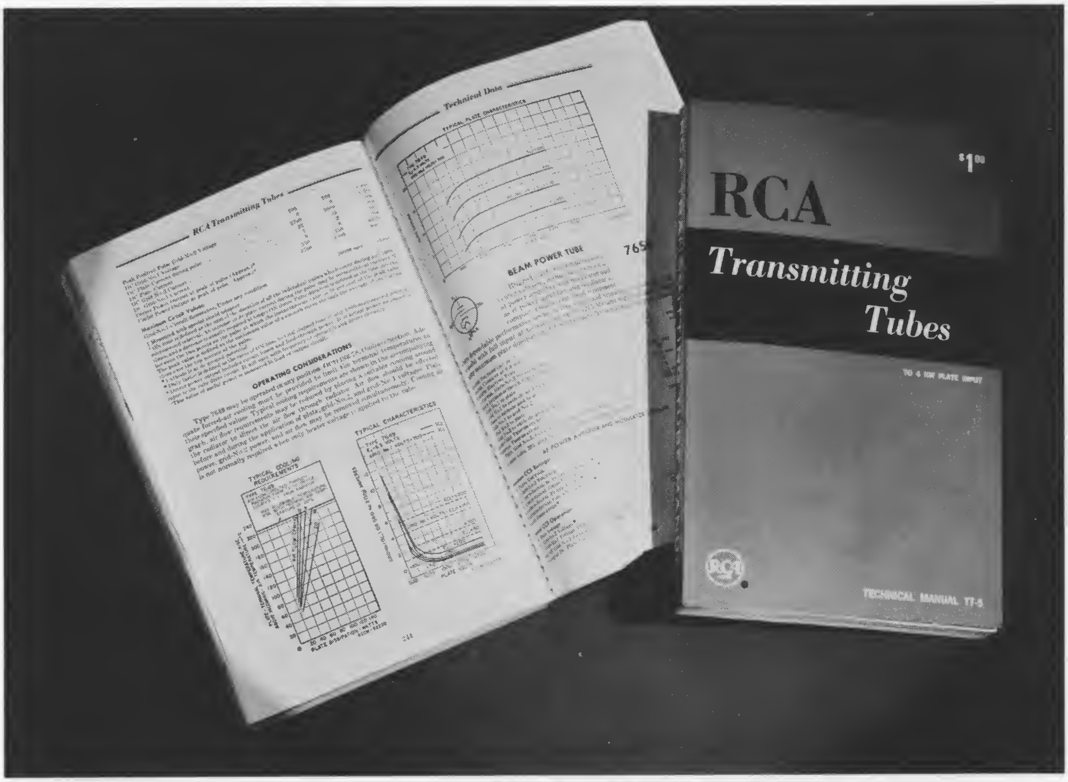

NEW RCA TRANSMITTING TUBE MANUAL TT-5

Every ham will want a copy of RCA's new, 320-page transmitting tube manual. This edition is the largest to date and has been thoroughly revised and updated to keep pace with advances in power-tube technology.

Of tremendous value to radio amateurs, engineers, and others technically concerned with transmitting tubes, the new TT-5 manual provides information for the latest RCA types, including the new cermolox family of ceramic-metal tubes. Coverage of single-sideband information has been considerably increased and includes new single-sideband ratings; discussions of linear power amplifier design; and sample calculations of operating conditions for two-tone modulation.

The popular Circuits Section now contains 23 typical transmitting and industrial circuits. Among these are circuits for a class B linear rf amplifier for single-sideband service; a 120-watt, 50-Mc transmitter; a single-sideband exciter; a 144-to-148 Mc mobile transmitter; and a five-band, 10-to-80 meter transmitter.

In easy-to-understand style, the manual's fully illustrated text material covers power-tube fundamentals, construction, applications, operation and adjustment, and installation—as well as rectifier considerations and interpretations of tube data.

Over 180 types of transmitting tubes and related rectifier tubes are included in the Technical Data Section, which gives maximum ratings, characteristics, typical operating values, and curves.

A reference work that belongs in every ham shack, "RCA Transmitting Tubes" (TT-5) may be obtained from your RCA tube distributor or by sending $1.00 to "Commercial Engineering, RCA Electron Tube Division, Harrison, N. J."

From your local RCA distributor, headquarters for RCA receiving and power tubes.

RCA HAM TIPS is published by the RCA Electron Tube Division, Harrison, N. J. It is available free of charge from RCA distributors.

•

Harvey Slovik, Editor

•

William Berce
Associate Editor

WHEN MAILING
PLACE POSTAGE HERE

READING
PA.

U.S. POSTAGE
02 1/2

BLK. RT.
AC'L. 1/8¢ PD.

Distributed by
GEORGE D. BARBEY CO., INC.
Reading Pottstown
Lancaster Lebanon

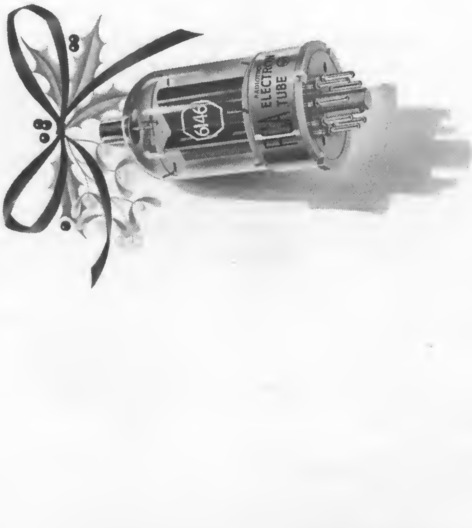

63* in '63

from the RCA Electron Tube Division

THE MOST TRUSTED NAME IN ELECTRONICS

*Message Sixty-Three (63) listed in ARRL Log Book: "Most Sincere Wishes for Health, Happiness and Prosperity"

RCA HAM TIPS

A PUBLICATION OF THE RCA ELECTRON TUBE DIVISION

VOL. 23, NO. 1 ©1963, RADIO CORPORATION OF AMERICA WINTER, 1962-63

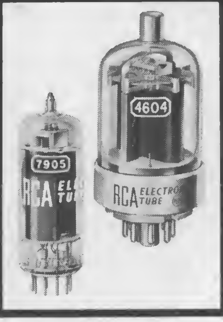

A MOBILE 50-WATT TRANSMITTER FOR THE SIX- AND TWO-METER BANDS

Part I

By M. R. Adams, WA2ELL, and P. B. Boivin, K2SKK

RCA Electron Tube Division, Harrison, N. J.

A continual increase in the number of technician-class operators is creating new peaks of activity on the six- and two-meter bands. This trend, of course, is most pronounced in metropolitan areas and is evidenced by the quantity and variety of commercial equipment now available for these bands. With the rising popularity of VHF mobile operation, many hams have been seeking new designs to help them achieve higher levels of operating convenience and economy. The use of both six and two meters by Civilian-Defense "RACES" units also makes operation on these bands attractive for emergency use. In a two-part article which will be concluded in the Spring issue, the authors report on a compact, 50-watt amateur mobile transmitter which can be conveniently mounted under an auto dashboard and has a parts-cost which they estimate at no higher than $100. In addition to bandswitching capability for coverage of both six- and two-meter bands, this versatile performer features RCA's recently announced 4604 and 7905 "quick-heating" beam power tube types for added power economy, and incorporates a variable-frequency oscillator—an advantage seldom, if ever, encountered in today's VHF amateur mobile equipment.

The six- and two-meter frequencies are ideal for mobile installations because of the small antenna size and low power needed for good local coverage. However, the higher frequencies in these bands usually require additional tubes for multipliers and drivers. These additional tubes usually increase the standby power drain on the vehicle battery—unless they are the new quick-heating types recently announced by RCA.

The 50-watt transmitter described in this article is a six- and two-meter plate-modulated AM rig using the new RCA-4604 and -7905 quick-heating beam power tubes. With these tubes, you're on the air in less than one second after you press the microphone push-to-talk button! The only standby power needed in the rf section is that for the conventional VFO heater, which is left on for stability. The push-pull plate modulator delivers that "audio punch" that is so essential to mobile operation and not usually found in screen-grid-modulated finals. In addition, the transmitter and modulator package are designed for dashboard mounting for easy accessibility and convenience of operation.

Front view of WA2ELL's and K2SKK's mobile 50-watt transmitter. Unit measures approximately 12 inches in width, 5 inches in height, and 10 inches in depth.

Circuit Description

Switching from the six-meter band to the two-meter band presents some problems not encountered at the lower frequencies. In the final stage, for example, the series-tuned tank circuits must be switched without adding excessive lead length on two meters, and yet some means of coupling to the antenna must be provided. Part of the multiplier string must also be switched out of operation on six meters without disrupting the series-connected heater connections on the quick-heating tubes. These and other problems are resolved in the later discussions.

Variable-Frequency Oscillator

The VFO uses an RCA-6417 miniature beam power tube in a modified series-tuned Clapp oscillator which tunes a basic frequency of 8.0 to 9.0 megacycles. When multiplied, this basic frequency range covers both the six- and two-meter amateur bands. The 8-to-9-megacycle frequency was chosen as the best compromise between stability and a minimum number of multiplier stages. Frequency stability of the VFO is assured by such design features as regulated screen-grid voltage on the 6417, a double bearing VFO capacitor, a ceramic coil form rigidly mounted on the main chassis, and zero-temperature-coefficient (NPO) capacitors. The plate circuit of the VFO doubles the frequency to cover a range of 16 to 18 megacycles. The VFO output is tuned by capacitor C_7 which is controlled from the front panel.

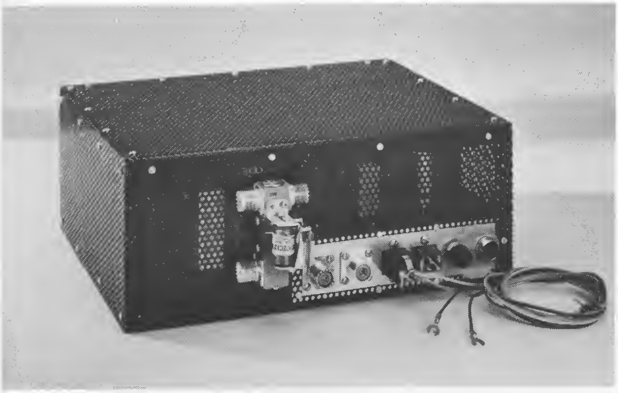

Rear view of new mobile transmitter showing antenna relay, microphone connector, and power connectors.

Multipliers

The VFO is followed by two triplers and a straight-through driver which increase the frequency to 144 megacycles. The circuits for the triplers V2 and V3 are of conventional design and are quite stable if reasonable care is used in wiring (e.g., the use of shortest possible leads for rf wiring and generous bypassing). Front-panel plate tuning is provided by C_{15} and C_{22}. A switch deck (S_{2a} and S_{2b}) located near V2 provides two functions. S_{2a} switches the output of multiplier V2 directly to the final for six-meter operation, or to the next multiplier, V3, for two-meter operation. The six-meter band is covered as the VFO tunes from 8333 to 9000 kilocycles, or the upper two-thirds of the dial. This basic frequency doubles in the plate circuit of V1, then triples in V2 to cover 50 to 54 megacycles. For two-meter operation, the VFO tunes the

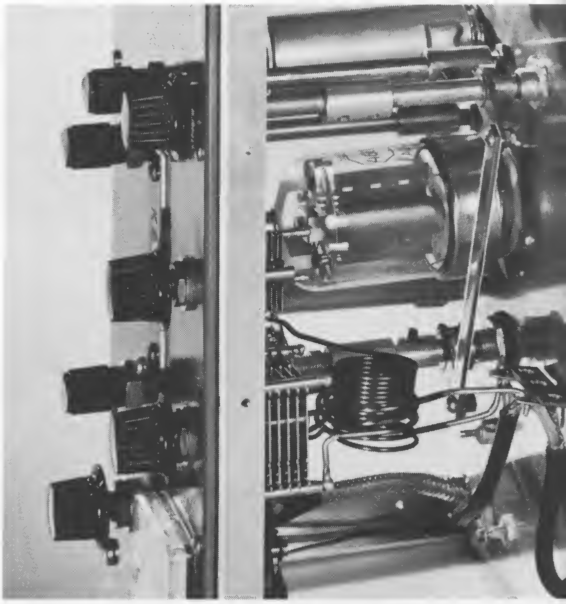

Top view of unit showing detail of bandswitch mechanism.

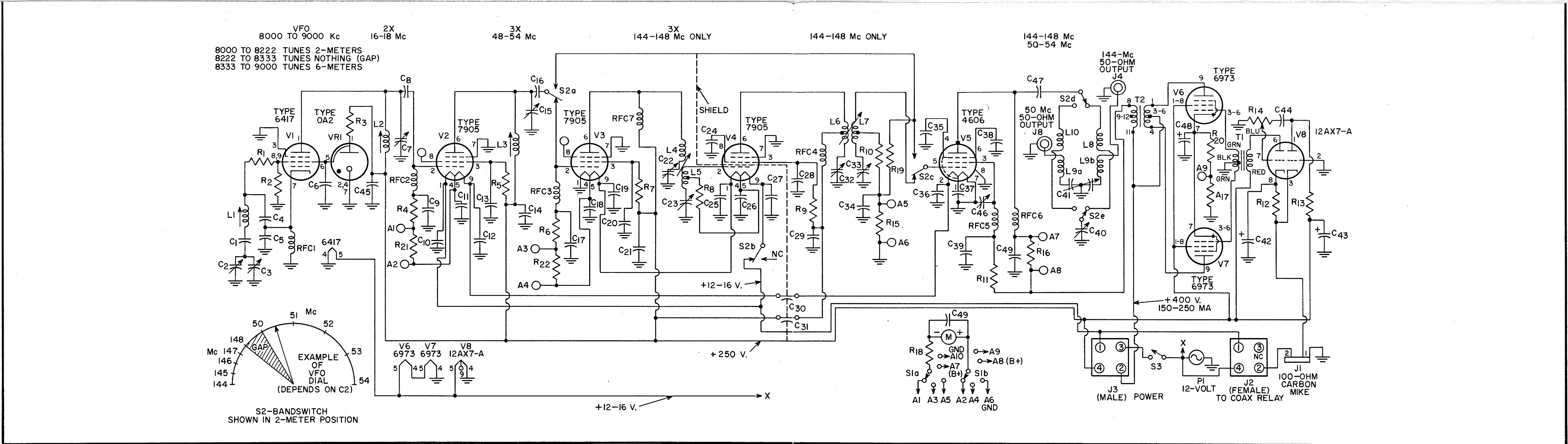

C_1—220 pf, NPO disc ceramic
C_2—5-20 pf, double-bearing variable (Hammarlund MC-20-S or equiv.)
C_3—4-30 pf, NPO ceramic trimmer (Centralab 822-AZ or equiv.)
C_4, C_5—390 pf, silver mica
C_6, C_9, C_{10}, C_{11}, C_{12}, C_{13}, C_{14}, C_{17}, C_{18}, C_{19}, C_{20}, C_{21}, C_{24}, C_{25}, C_{26}, C_{27}, C_{28}, C_{29}, C_{34}, C_{39}, C_{45}, C_{49}—0.001 µf 600 WV disc ceramic bypass capacitors
C_7, C_{15}—2.3-14.2 pf, Johnson Midget Variables (15M11 160-107 or equiv.)
C_8, C_{16}—100 pf, disc ceramic
C_{22}—1.5-5 pf, Johnson Midget Variable (5M11 160-102 or equiv.)
C_{23}, C_{33}—1-8 pf, Teflon tubular trimmer (Erie 532-10 or equiv.)
C_{30}, C_{31}—0.001 µf ceramic feed-thru (Centralab MFT-100 or equiv.)
C_{32}—2.8-17.5 pf, variable (Johnson Midget 160-107 or equiv.)
C_{35}, C_{36}, C_{37}, C_{38}—0.001 µf button silver mica (Erie 370-FA-102J or equiv.)
C_{40}—3.6-15 pf, double-spaced variable (Hammarlund HF-15-X or equiv.)
C_{41}—6.3-50 pf, 2-section differential variable (Johnson 167-33 or equiv.)
C_{42}—10 µf 50 WV electrolytic
C_{43}—8 µf 450 WV electrolytic
C_{44}—0.01 µf 600 WV paper
C_{46}—5-80 pf, mica trimmer (Arco 462 or equiv.)
C_{47}—0.001 µf 2000 WV transmitting mica
C_{48}—25 µf 50 WV electrolytic
J_1—2-wire & shield microphone jack (Amphenol 80-PC2F or equiv.)
J_2—Cinch-Jones 4-terminal female (261-12-04-010 or equiv.)
J_3—Cinch-Jones 4-terminal male (261-11-04-010 or equiv.)
J_4, J_8—Coaxial cable connector (Amphenol SO-239A or equiv.)
J_5, J_6, J_7—Connectors part of coaxial relay
L_1—32 turns of No. 24 enamelled wire, 11/16-inch long, ½-inch ceramic CTC PLS-7-2C4L slug form
L_2—26 turns of No. 28 enamelled wire, ⅜-inch long, ¼-inch ceramic CTC slug form CTC PLS-6-2C4L
L_3—7 turns of No. 24 enamelled wire, 5/32-inch long, ¼-inch ceramic CTC slug form CTC PLS-6-2C4L
L_4—4½ turns of No. 18 enamelled wire, 9/16-inch diameter, ½-inch long
L_5—4½ turns of No. 18 enamelled wire, 7/16-inch diameter, ⅜-inch long, center-tapped for R_8
L_6—3 turns of No. 20 enamelled wire, ½-inch diameter, ⅜-inch long, center-tapped for RFC_4
L_7—3 turns of No. 20 enamelled wire, ½-inch diameter, 5/16-inch long, center-tapped for R_{10}
L_8—2 turns of No. 14 enamelled wire, 13/16-inch diameter, ⅜-inch long, wound close-space on ¾-inch mandrel, released and stretched to length
L_{9a}, L_{9b}—2 turns of No. 14 enamelled wire, 13/16-inch diameter, ⅜-inch long
L_{10}—11 turns of No. 16 enamelled wire, 13/16-inch diameter, close wound ⅞-inch long
M—Meter, 1 ma full-scale
P_1—Microphone plug (Amphenol 80-MC2M or equiv.)
P_2—Cinch-Jones cable clamp (261-11-04-030 or equiv.)
P_3—Cinch-Jones cable clamp (261-12-04-030 or equiv.)
P_4, P_5, P_6, P_7—Coaxial cable connector (Amphenol 83-1SP) (RG-58/U inserts 83-168 3/16-inch)
PL_1—Bayonette pilot bulb socket and red jewel indicator
R_1—68 ohm, ½ watt
R_2, R_{13}—47 K, ½ watt
R_3—5 K, 10 watt, wire-wound
R_4, R_6—56 K, ½ watt
R_5, R_7, R_9—15 K, ½ watt
R_8, R_{10}, R_{19}—18 K, ½ watt
R_{11}—18.5 K, 3 watt (3-56 K, 1 watt in parallel)
R_{12}—1 K, 1 watt
R_{14}—½ megohm potentiometer
R_{15}, R_{21}, R_{22}—470 ohm, ½ watt
R_{16}, R_{17}—10 ohm, ½ watt
R_{18}—1800 ohm, ½ watt
R_{20}—300 ohm, 10 watt
RFC_1, RFC_2, RFC_3—750 microhenry
RFC_4, RFC_6, RFC_7—Ohmite Z-144 or equiv.
RFC_5—Ohmite Z-50 or equiv.
RY_1—Advance coaxial relay, CE/1C2C/12VD (12-volt DC coil and auxiliary contacts)
RY_2—Potter & Brumfield SPST Relay MR3D or equiv.
S_1—DP5T rotary wafer switch, non-shorting (Centralab PA-1003 or equiv.)
S_{2a}, S_{2b}, S_{2c}, S_{2d}, S_{2e}—Centralab SPDT contacts on three separate ceramic wafers (miniatures) SEE TEXT
S_3—SPST toggle switch
T_1—Driver transformer, 10 K plate to PP grids, 3:1 pri. to ½ sec. (Stancor A-4723 or equiv.)
T_2—Modulation transformer, Stancor A-3892 poly-pedance 150 ma
Miscellaneous—Microphone, Astatic Model 10M5A carbon button with PTT switch (or equiv.); National MCN VFO dial

Figure 1: Schematic diagram and parts list of WA2ELL's and K2SKK's low-battery-drain mobile transmitter.

lower one-third of the dial, or 8000 to 8222 kilocycles. This basic frequency is then doubled in the plate circuit of V1 and tripled by V2 to a frequency of 48 to 49.3 megacycles. The output of V2 is switched by S_{2a} to V3 where the frequency is again tripled to cover a range of 144 to 148 megacycles to drive V4, the straight-through driver for the final. In the six-meter position, S_{2b} disconnects the filament power to the two-meter tripler and driver (V3 and V4), which are not used, thereby leaving the filaments of V2 and V5 in series for six-meter operation. (Note that reference is made to "filaments" of the 7905 and 4604 quick-heating tubes. These tubes are filamentary-cathode types and must be treated as such with respect to cathode dc and rf potentials.)

Driver

The driver is a straight-through amplifier which provides adequate power between 144 and 148 megacycles to drive the 4604 final amplifier. The 7905 does not provide sufficient output—when used as a doubler-driver at two-meter frequencies—to drive the 4604 to the required 2 milliamperes grid current. V4 must be shielded across the socket to prevent self-oscillation. The series-tuned circuits in the plate and grid are not switched because they are only used for two-meter operation. Neutralizing should not be necessary when a straddling shield is used across the socket.

Final Amplifier

The final amplifier is a plate-modulated single-ended stage utilizing the RCA-4604, which is similar in ratings to the popular 6146. The 4604 uses directly heated filaments for the quick-heating feature. From a cold start, this tube and the 7905 drivers and multipliers reach approximately 90% power output within one second after application of filament voltage. The filament is specifically designed to withstand the normal voltage variations encountered in mobile use. The grid circuit is series-tuned for two meters and sufficient reserve drive is available from V2 to utilize an untuned grid-No. 1 circuit on six meters. This arrangement simplifies the switching and reduces the number of components required.

The plate circuit is series-tuned on both six- and two-meter bands. One tuning capacitor (C_{40}) is switched from one tank coil to the other by one bandswitch deck. Two separate links (L_{9a} and L_{9b}) are used in conjunction with two separate antenna SO-239 jacks at the rear of the transmitter. Each separate link is series-tuned by one-half of a two-section

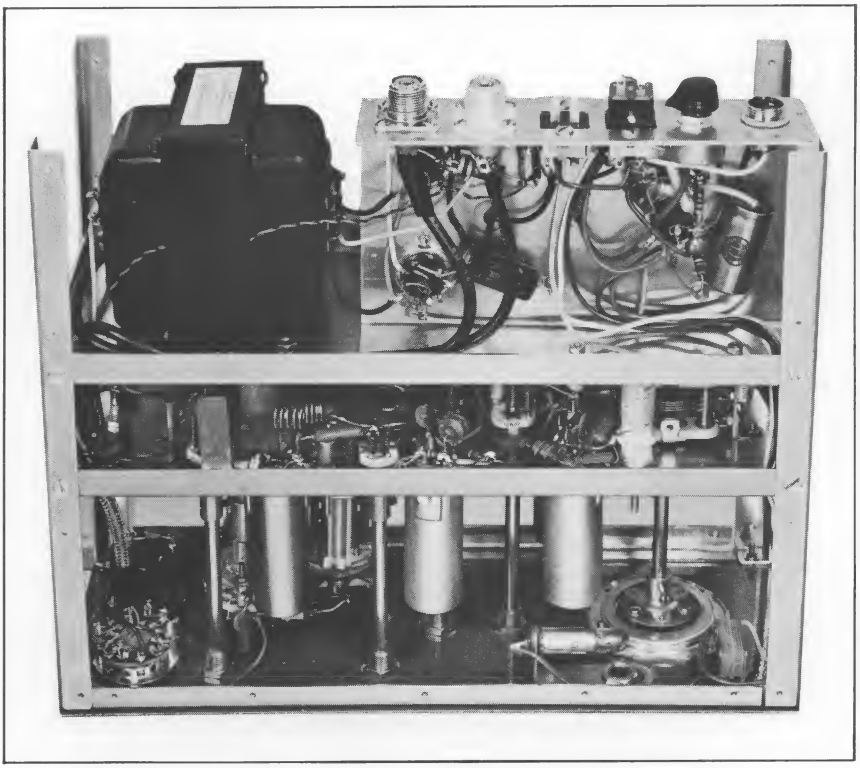

Bottom view showing modulator construction and rf section.

differential capacitor (C_{41}) which is used for antenna loading. This arrangement permits the combination of two functions in one front-panel control. Separate antenna jacks are feasible because the same mobile antenna is rarely used on both six- and two-meter bands. The 4604 is neutralized by a tuned screen-grid network (RFC_5 and C_{46}).

Modulators

The RCA-6973 modulators deliver 20 watts of peak power for plate modulation of the final. At the low voltages used in this transmitter, this output is adequate for 100% modulation. Cathode bias in the modulator eliminates the need for a negative fixed-bias supply—an important feature because this type of supply is not always readily available in mobile installations. The speech amplifier (V8) is designed for a high-output carbon microphone. (A crystal microphone would require an additional triode for amplification ahead of V8.) The speech-amplifier-and-modulator circuit is conventional and requires no special precautions in wiring. Because the 6973's become hot in operation, they should not be covered by a tube shield. A clip should be used to hold the tubes in the sockets. V8 requires a conventional tube shield.

Metering

A five-position switch (S_1) is used with a 0-1 milliampere meter to read final plate and grid currents, modulator cathode current, and multiplier grid currents. The value of the series-multiplier resistor (R_{18}) depends on the internal resistance of the meter and the full-scale sensitivity desired. The arrange-

Top view of 50-watt bandswitching transmitter showing modulator layout and final tank-circuit components.

ment used in this transmitter utilizes the meter as a voltmeter to measure the voltage drop across resistors in series with the plate circuit in each stage. In this way, circuit disturbance is kept to a minimum since the metering resistors are always in the circuit. The values in this circuit provide a full-scale sensitivity of 200 milliamperes for plate-current readings and 2 milliamperes for grid-current readings. Both legs of the meter circuit are switched together because there is B+ voltage on both sides of the metering resistor in some positions. The switch itself is mounted on the chassis and is operated by a shaft extending to the front panel. This arrangement keeps leads to the switch short and prevents stray coupling to the final tank coils, so that the possibility of parasitic oscillations is minimized.

Transmitter Power Requirements

The transmitter-modulator combination is designed to operate from a supply that delivers approximately 300 milliamperes at 400 volts and 200 milliamperes at 250 volts, or a total of approximately 170 watts. Because the final and modulator use 400 volts B+, two separate high-voltage supplies are not needed. The total standby power required from the 12-volt dc supply is one ampere when the unit is turned on; during transmission, a current of 1.85 amperes is required on six meters or 2.5 amperes on two meters. The B+ supply requirements depend on the type of supply used and its conversion efficiency. The actual current drawn by the transmitter at 400 volts is 215 milliamperes with no modulation; however, the power supply must deliver peak currents of up to 300 milliamperes when the final is modulated. The authors use dynamotors already on hand to power this unit. Dynamotors are readily available at very moderate cost from military-surplus jobbers.

Auxiliary Antenna and Receiver Switching

During transmit periods, a coaxial relay RY_1 on the rear of the transmitter can be used to mute the receiver as well as switch the antenna lead-in between transmitter and receiver. This relay is operated by the push-to-talk switch on the microphone. Because there are separate jacks for six- and two-meter antennas on the rear of the transmitter, a short piece of coaxial cable must be used between either one of these jacks and the transmitter side of the coaxial relay. This jumper, as well as the antenna, must be changed when bands are changed. RG-58/U, 50-ohm coaxial cable is usually preferred for mobile work. Should the builder desire further flexibility, another coaxial relay can be utilized externally to perform the function of switching the jumper.

From your local RCA distributor, headquarters for RCA receiving and power tubes.

RCA HAM TIPS is published by the RCA Electron Tube Division, Harrison, N. J. It is available free of charge from RCA distributors.

GEORGE D. BARBEY CO., INC.
Reading Pottstown
Lancaster Lebanon

WHEN MAILING
PLACE POSTAGE HERE

HAM TIPS

A PUBLICATION OF THE RCA ELECTRON TUBE DIVISION

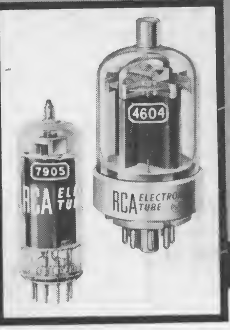

VOL. 23, NO. 2 ©1963, RADIO CORPORATION OF AMERICA SPRING, 1963

A MOBILE 50-WATT TRANSMITTER FOR THE SIX- AND TWO-METER BANDS

Part II

By M. R. Adams, WA2ELL, and P. B. Boivin, K2SKK

RCA Electron Tube Division, Harrison, N. J.

The Winter, 1962-1963, issue of HAM TIPS presented the first installment of a two-part article on a compact, mobile-type 50-watt amateur bandswitching transmitter designed for coverage of the six- and two-meter bands and employing RCA "quick-heating" tube types 4604 and 7905 for added power economy. In that issue, the authors covered such considerations as circuit description, variable-frequency oscillator, multipliers, driver, final amplifier, modulators, metering, transmitter power requirements, and auxiliary antenna and receiver switching. The article is now concluded with a discussion of chassis construction and layout, bandswitching details, capacitor-mounting details, VFO design, driver shielding and construction details, final-amplifier layout, modulator details, VFO calibration and alignment, alignment procedure for multipliers and driver, and general conclusions and installation tips.

Front view of WA2ELL's and K2SKK's mobile 50-watt transmitter. Unit measures approximately 12 inches in width, 5 inches in height, and 10 inches in depth.

Chassis Construction and Layout

Templates for the chassis layout are shown in Figures 3, 4, and 5. The main chassis is made of 20-gauge sheet brass to facilitate ground connections. The socket straddle shield for V4 is fabricated from 24-gauge copper. Aluminum angle stock ($\frac{1}{2}$-inch by $\frac{1}{2}$-inch) is cut and drilled to tie together the front panel, main chassis, and modulator. Two more pieces of aluminum angle, $\frac{3}{8}$-inch by $\frac{3}{8}$-inch, are attached to the top and bottom edges of the front panel to hold the cover. This type of construction results in a finished unit which can be dash-mounted and requires minimum space in the front seat of the vehicle. The use of a perforated sheet-steel cover, which is mounted in two halves, provides easy access for servicing and allows air to circulate freely. The front panel is fabricated from ⅛-inch sheet aluminum. The modulator is a simple channel-shaped chassis cut down from commercially available chassis or constructed from 1/16-inch sheet aluminum as shown in Figure 5. The meter hole in the front panel should be cut with a hole cutter in a drill press. (A chassis punch may warp the panel.) All other large holes can be punched with standard chassis punches.

Bandswitching Details

Bandswitching is accomplished by means of a single knob on the front panel. Figure 6 shows the mechanical linkage for this control which operates S_{2a} directly on the main chassis. The steel ball in this deck provides the detent action for all three switches. A crank on the S_{2a} shaft operates a connector bar which fastens to a similar crank on the common shaft of S_{2c} and S_{2e}. The ball detents in these two ganged switches are removed to decrease the mechanical resistance on the connector bar and at the knob on the front panel. The ganged decks are held in position by the connector bar. An end-to-end shaft-extension coupling having two set screws is available at most parts-suppliers and can be cut in half to make the two cranks for the connector bar. Because the couplings are usually nickel-plated brass, a small 1/16-inch sheet-brass tab can be soldered to the end of the coupling to form a crank and to operate the connecting bar (see Figure 6). The nickel plating should be filed off the end to permit soldering.

MODIFICATIONS: In the Part I, Page 5, photograph (Winter, 1962-63, issue) showing modulator construction and rf section, the meter switch, S_1, is shown mounted on the front panel. The authors subsequently modified the transmitter to mount S_1 on the rf chassis with a shaft extension to the front panel, as described in the text. The main rf chassis template (Part II, Figure 4) includes this modification. The modification was made to prevent the meter leads from picking up stray rf from the final tank coil. Also note that in the Part I, Figure 1 schematic diagram, the final amplifier, V5, is incorrectly labeled as 4606 rather than 4604 as described in the text. Also, VFO tube V1 shows the junction of R_1 and R_2 incorrectly connected to the screen grid rather than to the control grid (pins 8 and 9). Multiplier V3 shows pin 8 incorrectly connected to the suppressor grid rather than to its screen grid. On both V2 and V3, socket pin 8 should be tied to pin 3 with a short jumper. Resistor R_{17} is incorrectly shown as A_{17}. Switch S_1 in Parts List (S_{1a} and S_{1b} in schematic diagram) is actually a two-pole, single-wafer, five-position rotary. The ceramic switches (Parts List designations S_{2a}, S_{2b}, S_{2c}, S_{2d}, and S_{2e}) are three Centralab miniature type PA-2007's—modified as described in the text.

The deck with S_{2d} and S_{2e} is back-mounted to the rear of the front panel by the two screws that hold the wafer to the switch, rather than by the shaft. Longer, 4-40 machine screws are used, along with two standard ¾-inch spacers which are cut down to ⅝-inch. *Care must be taken to line up the front panel and main chassis so that the switch shafts do not bind or place undue pressure on the ceramic wafer sections.* Remember that the S_{2e} section is wired backwards because it turns in the opposite direction to S_{2d}. Because of the close spacing between terminals on these switches, unused contacts which are adjacent to terminals with high rf voltage should be removed by carefully drilling out the rivets. This step is necessary to prevent breakdown and to decrease circuit capacitance. To prevent stray 50-megacycle rf from feeding through to the final, the terminal on S_{2a} which connects to the grid of the final amplifier is grounded when the switch is in the two-meter position. All shaft couplings on this switch should have flats filed on the shaft under the set-screws to maintain proper alignment and indexing on all three decks.

Capacitor-Mounting Details

Tuning capacitors C_7, C_{15}, C_{22}, and C_{32} are Johnson midget variable capacitors which mount in a ¼-inch hole and have a 3/16-inch-diameter slotted shaft for screwdriver adjustment. These capacitors can be adapted to front-panel tuning by using 3/16-inch shaft couplings and extensions. Because these items of hardware are often difficult to obtain, 3/16-inch-to-¼-inch shaft adapters can be used which will allow standard ¼-inch hardware to be used on the front panel. It is suggested that oversized holes be used in the front panel to facilitate proper alignment of switch and capacitor shafts during assembly.

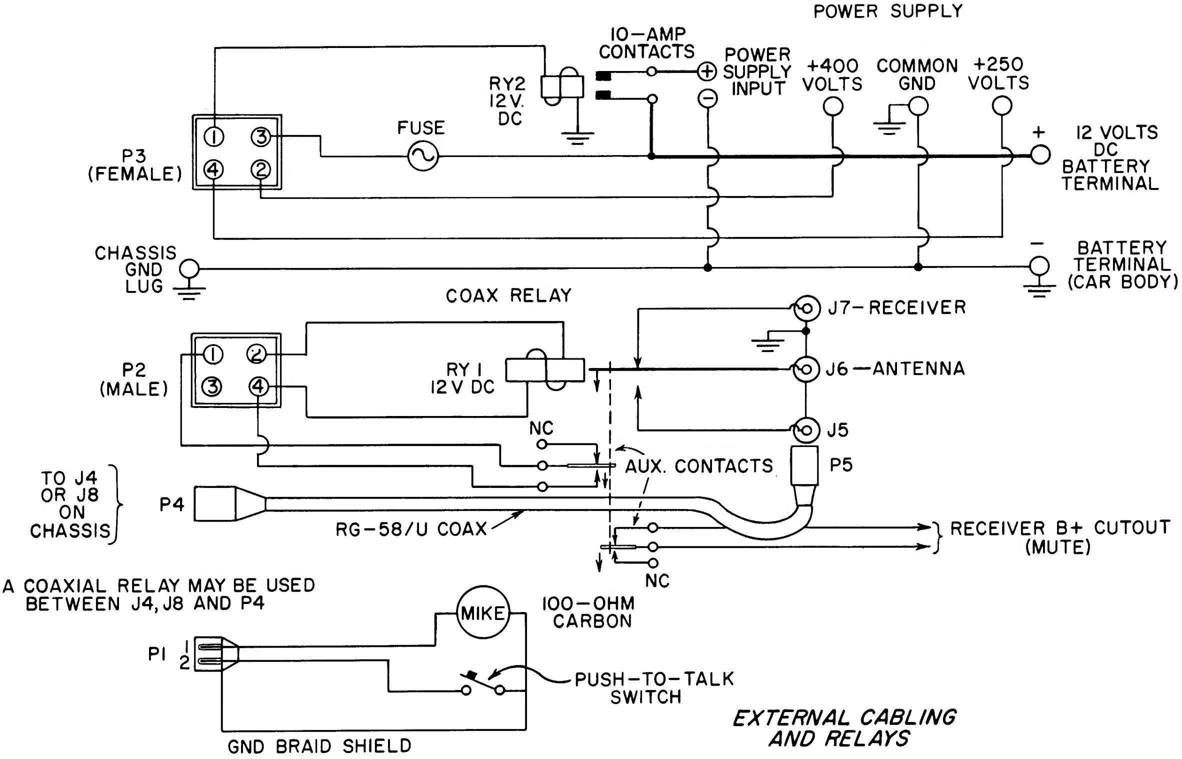

Figure 2: Suggested cabling diagram.

VFO Design

The VFO components should be mounted as rigidly as possible. Care in this respect results in mechanical stability and freedom from FM caused by vibration. The VFO dial calibration favors six meters because the authors planned to use this band most frequently. Some constructors may prefer to add an additional switch in the VFO and two separate capacitors, thus allowing each band to be spread across the dial for easier tuning. Admittedly, crystal control is more stable for mobile operation; however, it is the authors' experience that once a VFO is available, crystals are seldom used. The flexibility of a VFO more than compensates for any difficulty that might be encountered (e.g., drifting out of the narrow passband of certain VHF converters). As a result, the crystal socket, mode switch, extra components, etc., are left out to save space and simplify construction.

Driver Shielding and Construction Details

Because tube V4 operates as a straight-through amplifier at 144 megacycles, adequate isolation between input and output circuits must be provided to prevent oscillation. Neutralization was not necessary with a straddle-shield across the socket to shield the plate-circuit components from the input coils. Oscillation could be a problem with variations in design; therefore, certain units may require neutralization. The shield used in this transmitter is fashioned from tinned-copper flashing and soldered in place so that socket pins 1, 2, and 3 are on the input side and the remainder of the pins are on the output, or plate-circuit, side. If the nine-pin socket has a center lug, it should be soldered to the shield. The size of the shield should be sufficient to separate coils and components as well as socket pins (see Part I photograph showing top view of transmitter and modulator layout and final tank-circuit components).

Final-Amplifier Layout

The grid-No. 1 wiring for final stage must be as close as possible to the bandswitch S_{2c} to keep lead length to a minimum. Bypass capacitors (C_{35}, C_{36}, C_{37}, and C_{38}) in the final are the chassis-mounted, ceramic-button-stand-off type which mount with a 3-48 machine screw. This type of capacitor provides excellent rf grounding with an octal socket. Grid coils for the two-meter band are mounted directly on the bandswitch contacts. The grid-leak bias resistors (R_{10} and R_{19}) are soldered directly to the chassis and as near the V5 socket as possible. The screen-grid neutralizing capacitor C_{46} is an Arco mica compression type and may be rigidly mounted directly across the V5 socket between pins 3 and 7. Plate-circuit components are switched by S_{2d} and S_{2e}. Again, short leads are essential on two meters. The switch-contacts support the tank coils and associated link-coupling coils L_{9a} and L_{9b}. RG-58/U coaxial cable couples directly to each link and carries the output through the main chassis and modulator panels to two separate SO-239 connectors on the rear apron of the modulator. Because these connectors are close to the audio speech amplifier, "hoods" are used to shield the connectors; rf feedback at this point could cause oscillation. The plate-tuning and antenna-loading capacitors are both mounted on the front panel, as well as switch deck S_{2d} and S_{2e}.

Modulator Details

The modulator is conventional and needs only a few comments other than what has already been outlined. Because the microphone connector and audio-gain control are both mounted on the rear apron, input leads to the speech amplifier (V8) are short. Once the audio gain is adjusted for a particular microphone, it is usually unnecessary to change it unless a different microphone is used.

The modulator panel is the same size as the main RF chassis and fastens to the angle brackets to complete the assembly. The pre-amplifier chassis and modulation transformer are then mounted to this panel. External power supply and antenna connectors are mounted on the modulator chassis. The antenna-switching coaxial relay is mounted on the rear of the punched-steel cover. A jumper lead completes the connection to the transmitter. Auxiliary contacts on the coaxial antenna relay are used to energize the quick-heating filament string in the rf chassis.

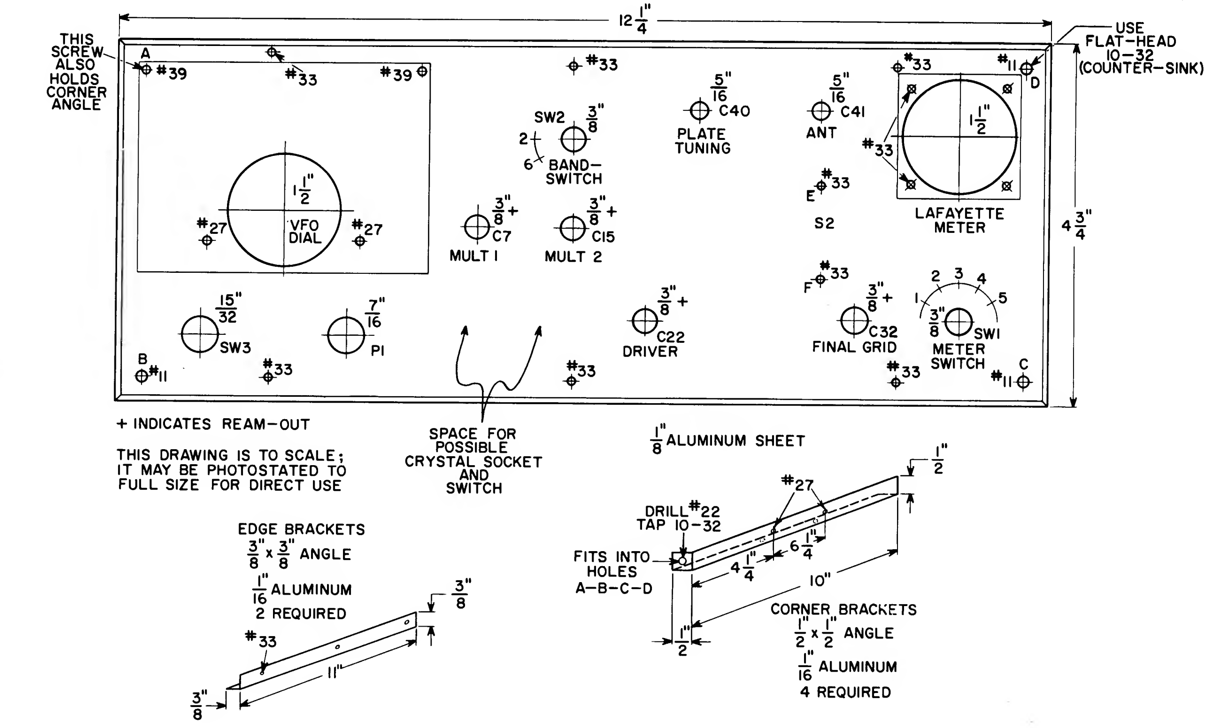

Figure 3: Construction details for front-panel template.

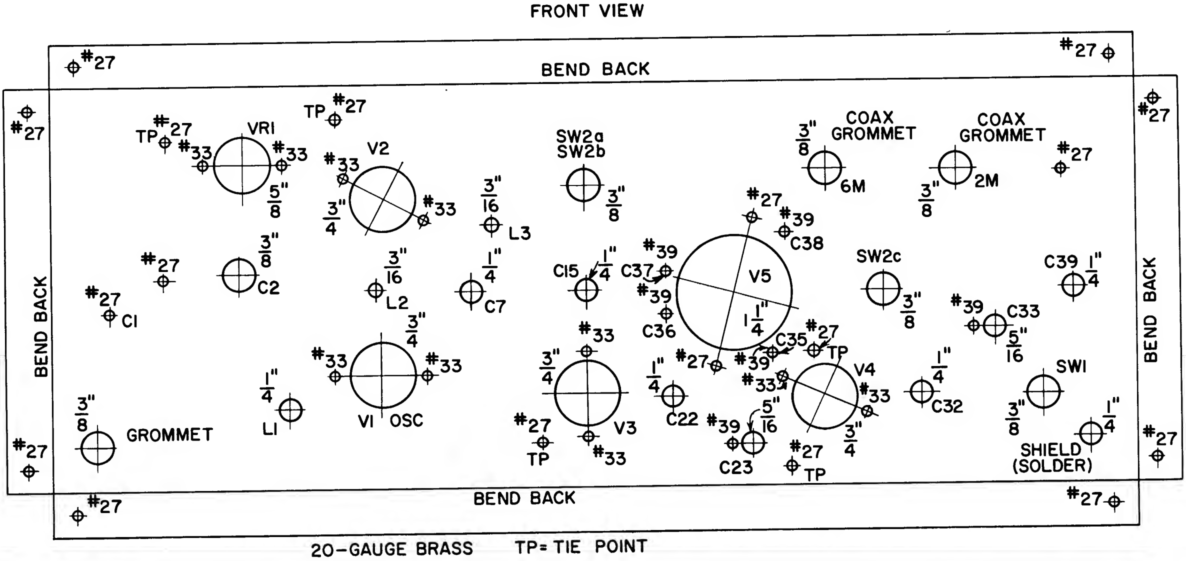

20-GAUGE BRASS TP= TIE POINT

THIS DRAWING IS TO SCALE; IT MAY BE PHOTOSTATED TO FULL SIZE FOR DIRECT USE

Figure 4: Construction details for main-chassis template.

VFO Calibration and Alignment

The VFO is calibrated from 8.0 to 9.0 megacycles with the aid of a BC-221 frequency meter or a good receiver with a crystal calibrator. The upper two-thirds of the dial scale is numbered with six-meter frequencies which correspond to the sixth harmonic of the basic VFO frequency (50 megacycles is the sixth harmonic of 8333 kilocycles). The lower third of the dial is numbered with two-meter frequencies which correspond to the eighteenth harmonic of the basic VFO frequency (145 megacycles is the eighteenth harmonic of 8055 kilocycles). Subdivisions of each band are placed at half-megacycle intervals.

When the VFO is being aligned, C_2 and C_3 are set at maximum capacitance and the slug in L_1 is tuned until the 8.0-megacycle beat note is heard on the BC-221. C_2 is then tuned to minimum capacitance and checked against the 9.0-megacycle beat note. If the 9.0-megacycle beat is not heard, C_3 is trimmed until it can be heard. C_2 should then be returned to maximum capacitance and the slug in L_1 retrimmed for the 8.0-megacycle beat. This procedure must be repeated several times to find a combination of L_1 and C_3 which covers the 8.0-to-9.0-megacycle range with maximum utilization of dial scale space. It should be remembered that, in aligning any VFO, the trimmer capacitors are always adjusted at the highest frequency on the dial and the coil slugs are adjusted at the lowest frequency on the dial.

Alignment Procedure for the Multipliers And Driver

When the VFO has been aligned and the power connections to the transmitter completed, the following steps should be followed to tune and align the multipliers and the driver:

1. Remove modulator tubes and disconnect the 400-volt B+ supply *only;* the 250-volt B+ supply is needed for this portion of the line-up.
2. Set band switch to six meters.
3. Set VFO to 51 megacycles on the dial.
4. Set capacitor C_7 to half-open.
5. With meter switch in position 1, adjust L_2 for maximum grid drive.
6. Set capacitor C_{15} to its half-open position.
7. Place meter switch in position 3 and adjust L_3 for maximum drive at 51 megacycles.

This step completes the alignment for six meters. In future use, the transmitter is tuned up on six meters merely by setting the VFO to the desired frequency and then tuning capacitors C_7 and C_{15} for maximum grid-No. 1 drive. The final stage may then be tuned for maximum output as indicated in steps number 13 and 14 which follow.

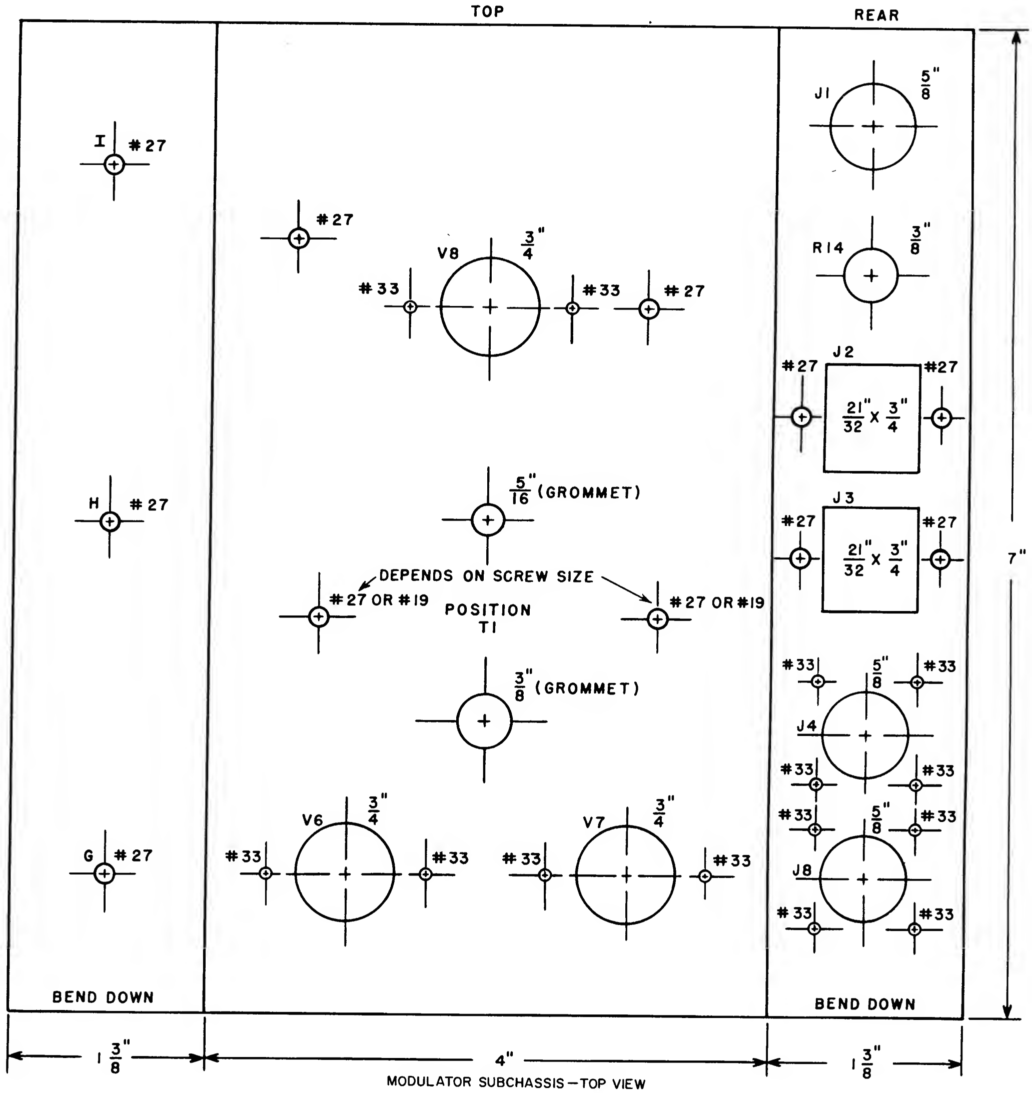

MODULATOR SUBCHASSIS—TOP VIEW

MAIN MODULATOR CHASSIS—REAR VIEW

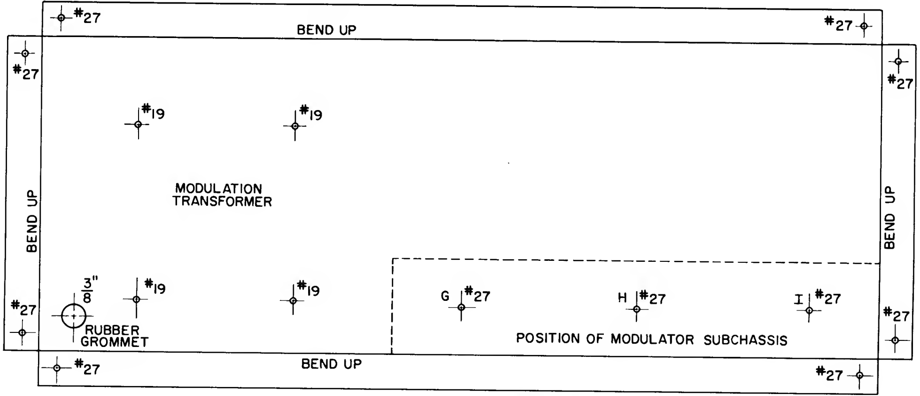

1/16" ALUMINUM

Figure 5: Construction details for modulator template (2 parts).

The alignment of the two-meter section of the transmitter is accomplished as follows:

1. Set the bandswitch to the two-meter position.
2. Set the VFO to 145.5 megacycles on the dial.
3. Peak capacitor C_7 for maximum output on the meter in position 1.
4. Peak capacitor C_{15} for maximum output with the meter in position 2.
5. Set capacitor C_{22} to its half-capacitance position.
6. Set capacitor C_{23} to half-capacitance (brass slug half out of the cylinder).
7. "Squeeze" coils L_4 and L_5 and adjust C_{23} to obtain maximum drive with the meter in position 3.
8. If there is no meter indication, adjust C_{32} until some drive is obtained, then return to step No. 7, above.
9. Set capacitor C_{33} to its half-capacitance point as in step No. 6.
10. Set C_{32} to its half-open position.
11. "Squeeze" coils L_6 and L_7 and adjust C_{33} for maximum output.
12. Adjust capacitor C_{46} (screen-grid neutralizing capacitor) for minimum change in drive as the plate tuning capacitor (C_{40}) is tuned back and forth through resonance.
13. Connect the 400-volt B+ supply; plug in the modulator tubes; and connect a dummy, non-inductive load to the two-meter antenna jack.
14. With the meter in position 4, turn on the transmitter and tune C_{40} for the resonance dip. Load the dummy load with C_{41} so the dip in plate current occurs at 150 milliamperes. This value should be the maximum plate current used. Recheck grid drive to the final and readjust C_{32} if necessary.
15. As C_{40} is rocked through resonance, recheck the neutralizing capacitor C_{46} for minimum *change* in grid drive to the 4604. Meter should be in position 3.
16. Switch the meter to position 5 and check modulator current. Modulator should idle at approximately 55 milliamperes and peak up to 125 milliamperes with voice modulation.
17. The antenna link positioning should be adjusted if capacitor C_{41} does not pass sufficient power to the load. The output into a 50-ohm non-inductive load, with 1:1 SWR should be approximately 20 watts at 145 megacycles and 30 watts at 51 megacycles.
18. Turn off the transmitter. Switch to six meters. Turn on the transmitter and tune up on 51 megacycles. No change in neutralizing should be required on the 4604 final.

When tuning the transmitter on the two-meter band, set the VFO to the desired frequency, then tune C_7, C_{15}, and C_{32} for maximum indication on the meter in respective positions 1, 2, and 3. With the meter in position 4, tune C_{40} for resonance and C_{41} for maximum power into the antenna.

As with any antenna fed from a transmitter link, the SWR should not be allowed to get too high (over 2:1) or it will be impossible to tune the transmitter properly. Link tuning is different from pi-net loading, which can usually couple appreciable power into a transmission line with a high SWR.

In all the above adjustments, it is necessary to have either a microphone in the carbon-mike socket or a switch in the proper J_1 termi-

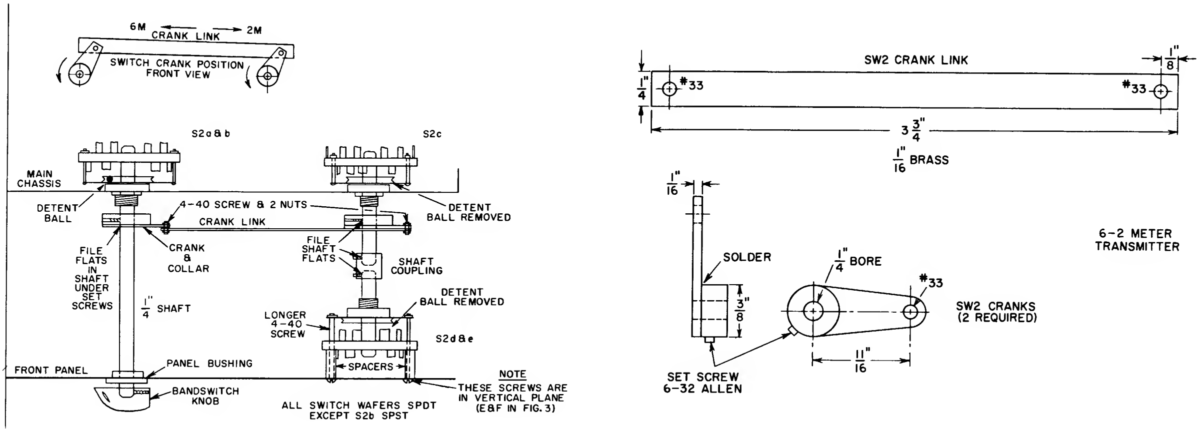

Figure 6: Detail of switches S_{2a}, S_{2b}, S_{2c}, S_{2d}, and S_{2e} (2 parts).

nals to turn the transmitter and quick-heating tube filaments on and off.

Conclusions and Installation Tips

The output section of this transmitter is designed to operate into a 50-ohm coaxial transmission line. Because of its small size, RG-58-U is ideal for mobile installation. A quarter-wave whip or combination coaxial antenna can be used with excellent results, although many amateurs today prefer horizontal polarization for mobile work. The coaxial relay switches the 50-ohm line from the antenna to either the receiver or transmitter and permits single-button, push-to-talk operation while the vehicle is in motion. As shown in Figure 2, pin No. 1 on P_3 is wired to energize a relay with heavier contacts which turns on the high-voltage power supply. Additional suggested power supply and antenna connections are shown in Figure 2.

The final amplifier could be operated with a combination of fixed negative bias and developed bias from drive. Under these conditions, the fixed bias would prevent the 4604 from exceeding rated plate dissipation in the event grid drive were lost. The fixed-bias feature is not incorporated in this transmitter because a negative supply was not available from the authors' dynamotor power supply.

Sufficient room is available on the front panel for an additional switch and crystal socket. If this feature is added, a crystal-controlled oscillator may be used in place of the VFO, as mentioned earlier in this article. The oscillator can be a 7905 quick-heating tube which would result in zero-standby power for the rf section. A 10-ohm resistor would have to be used in series with the 6-volt 7905 filament for 12-volt operation. This low-drain feature, plus crystal control, should be ideal for six- or two-meter CD work where portable power is at a premium. If such a 7905 crystal oscillator is employed, fixed bias on the 4604 is mandatory to protect the tube during the time the oscillator comes on.

Lower standby power could be obtained by substitution of a transistorized modulator, however, the tube modulator is less costly because of the higher cost of comparable transistors. A dynamotor power supply would be less costly than a transistorized power supply, especially because of the availability of war-surplus units.

The individual constructor may wish to incorporate his own variations in design, depending on personal preferences. This article shows what can be done with the new line of quick-heating transmitting electron tubes in mobile work—tubes made by RCA which offer the "mobiler" more VHF output power per dollar than any present-day semiconductor device!

From your local RCA distributor, headquarters for RCA receiving and power tubes.

RCA HAM TIPS is published by the RCA Electron Tube Division, Harrison, N. J. It is available free of charge from RCA distributors.

WHEN MAILING
PLACE POSTAGE HERE

HAM TIPS

A PUBLICATION OF RCA ELECTRONIC COMPONENTS AND DEVICES

VOL. 23, NO. 3 SUMMER, 1963

HAM-BAND CHARTS

Covering FCC Allocations From 1.8 to 450 Megacycles

By L. W. Aurick, K3QAX/W2QEX

RCA Electronic Components and Devices, Lancaster, Pa.

The Federal Communications Commission requires hams to be familiar with all frequency assignments for amateur operation. If you have been searching for a way to keep informed on the various types of emissions authorized on the 10 amateur bands from 1.8 to 450 megacycles, try posting the accompanying charts near your rig.

For sake of brevity, these charts cover only the bands up to 450 Mc, which represent the areas of operation for most hams. Amateur bands above this frequency include the ranges from 1215-1300 Mc, 2300-2450 Mc, 3300-3500 Mc, 5650-5925 Mc, 10,000-10,500 Mc, 21,000-22,000 Mc, and all frequencies from 40,000 Mc upwards. Hams interested in any of the latter frequency assignments should consult the FCC Rules and Regulations, Part 12, Amateur Radio Service, for available operating privileges.

Chart 1 will take a lot of the guesswork out of your low-frequency operation and can be used for quick selection of crystals or VFO frequencies for harmonic functions. Amateur bands from 160 to 10 meters are shown, as well as their harmonic relationships and authorized amateur emissions. Each line contains the symbols for the types of emissions authorized between the two frequencies shown.

The following examples illustrate the use of Chart 1:

(a) As indicated, your favorite 7.140-Mc "rock" can be a mighty useful item if you decide to invade 20-, 15-, or 10-meter 'phone. With suitable multiplier stages, you can be on 14.280, 21.420, or 28.560 Mc.

(b) This example concerns the use of a 3.55-Mc crystal on the higher frequency 'phone bands. Because it is right on the edge for 20-meter 'phone, it is not suitable there, but operates nicely 50 kilocycles "in" on 15 meters. If you can stand the QRM from the kilowatt signals, there is nothing else to worry about.

Chart 1 also can be used to determine the ranges to be covered by intermediate buffer and frequency multiplier stages.

It should be pointed out that the chart shows amateur bands in their *relative* harmonic sizes. Actually, the 10-meter band is nearly four times the size of the 80-meter band in assigned kilocycles.

Chart 2 shows assignments in the four lowest VHF bands. These bands are not directly harmonically related. At a glance, it can be seen that 50.10 Mc is the lowest frequency at which either tone-modulated keying (except for voice-interrupted code practice) or facsimile modulation is permitted. Likewise, 51.00 Mc is the lowest frequency at which an unmodulated carrier can be transmitted for other than short periods of testing.

At 52.50 Mc, the FCC begins to remove limitations. Above this frequency, amateurs may use most of the authorized wide-band frequency modulated emissions. Above 220 Mc, there are no sub-allocations. Any type of emission, including telegraphy and telephony, authorized to be used in either the 1.4- or 0.7-meter band, may be employed throughout each band. It is worthy of note that A5 modulation appears to be growing in popularity, with a number of determined amateurs operating between 420 and 450 Mc—the lowest-frequency amateur band in which television is permitted.

INDEX TO SYMBOLS USED IN CHARTS 1 AND 2

Showing All Emissions Authorized for Use

By Amateurs Through 450 Mc

Type of Modulation Or Emission	Type of Transmission	Symbol
Amplitude Modulated	Absence of Any Modulation	A0
	Telegraphy (On-Off Keying)	A1
	Telegraphy (Tone Modulated)	A2
	Telephony	A3
	Facsimile	A4
	Television	A5
Frequency (Or Phase) Modulated	Absence of Any Modulation	F0
	Telegraphy (Frequency Shift Keying)	F1
	Telegraphy (Audio Frequency Shift Keying)	F2
	Telephony	F3
	Facsimile	F4
	Television	F5

FOOTNOTE: The use of narrow-band frequency or phase modulation is subject to the condition that the bandwidth of the modulated carrier shall not exceed that of any amplitude-modulated carrier of the same audio characteristics.

FOOTNOTES TO CHARTS 1 AND 2:

(Chart 1)—Restrictions regarding the 160-meter band vary. Consult FCC Rules and Regulations, Part 12, or the nearest FCC district office for regulations governing your particular area.

(Charts 1 and 2)—Novice-Class licensees may use A1 emission between 3.70 and 3.75 Mc; 7.15 and 7.20 Mc; and 21.10 and 21.25 Mc. Novice operators also may use the same types of emissions authorized to others between 145 and 147 Mc.

The charts have been compiled from FCC Rules and Regulations, Part 12, as of August 1, 1963. The information is subject to change.

(Chart 2)—Technician-Class licensees may use all emissions authorized between 50 and 54 Mc; 145 and 147 Mc; and all amateur frequencies and emissions authorized above 220 Mc.

The "Index to Symbols Used in Charts 1 and 2" lists all emissions authorized for use by amateurs through 450 Mc. Wide-band modulation is implied in all listings for the "Frequency (or Phase) Modulated" section. However, only in the 10-meter band (between 29.00 and 29.70 Mc) may wide-band F3

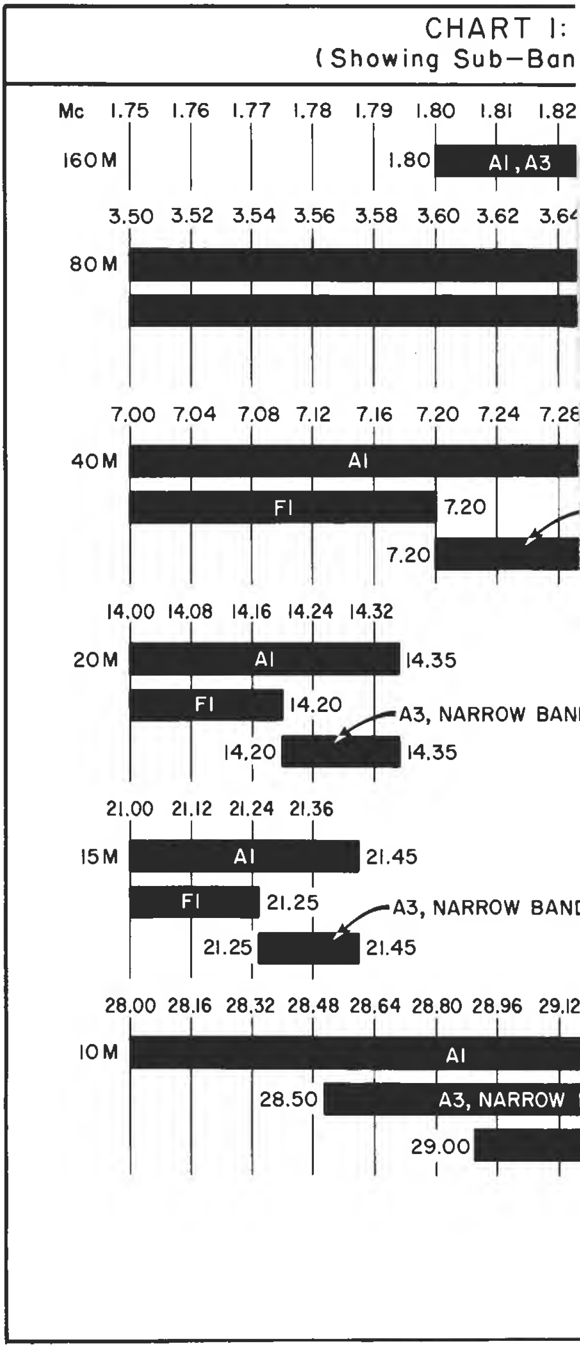

emission be used on the frequencies shown in Chart 1. All other "Frequency (or Phase) Modulated" assignments in Chart 1 are specifically narrow-band (6 kilocycles maximum).

Charts 1 and 2 apply only to amateur operators in the 50 states. Operation on 220 to 225 Mc in some parts of Texas and New Mexico is restricted between the hours of 0500 and 1800, Monday through Friday of each week, except when authorized in an organized Civil Defense program. If you live in this area, check with the district FCC Engineer-in-Charge at Dallas, Texas.

MATEUR BANDS FROM 160 TO 10 METERS

Allocations and Harmonic Relationships Between Bands)

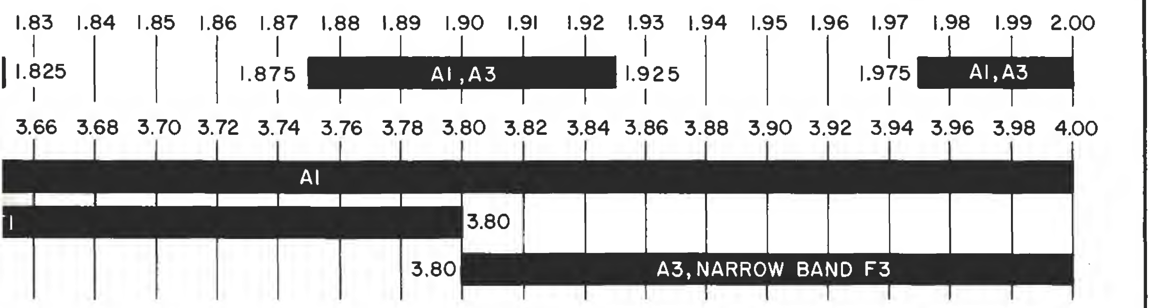

CHART 2: AMATEUR BANDS FROM 6.0 TO 0.7 METERS

(Showing Sub-Band Allocations)

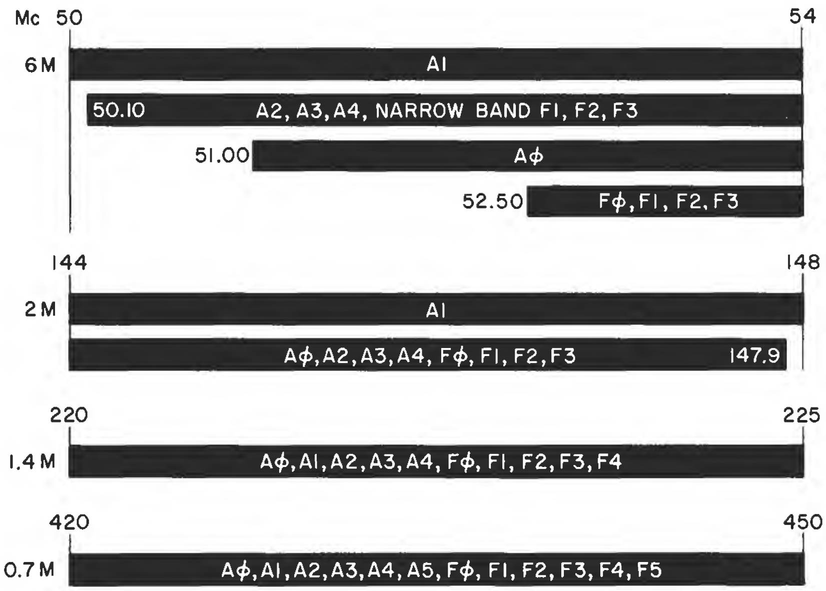

OUTSTANDING POWER-TUBE BOOK!

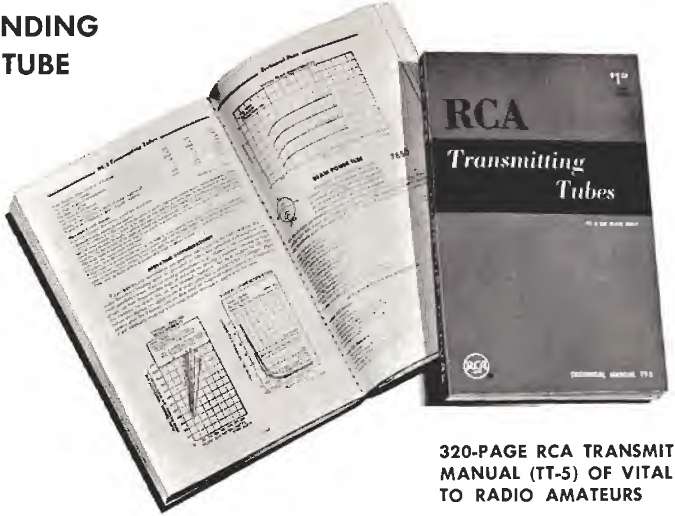

320-PAGE RCA TRANSMITTING TUBE MANUAL (TT-5) OF VITAL INTEREST TO RADIO AMATEURS

RCA's popular TT-5 manual is a treasure-house of information for every radio amateur, engineer, and technician concerned with transmitting tubes.

Thoroughly revised and up-dated to keep pace with advances in power-tube technology, the 320-page manual provides information on the latest RCA transmitting-tube types, including the famed *Cermolox*® family of ceramic-metal tubes.

Coverage of single-sideband information has been considerably increased and includes new single-sideband ratings, discussions of linear power amplifier design, and sample calculations of operating conditions for two-tone modulation.

The popular Circuits Section now contains 23 typical transmitting and industrial circuits. Among these are circuits for a class B linear rf amplifier for single-sideband service; a 120-watt, 50-Mc transmitter; a single-sideband exciter; a 144-to-148-Mc mobile transmitter; and a five-band, 10-to-80-meter transmitter.

The manual's fully illustrated text material covers power-tube fundamentals, construction, applications, operation and adjustment, and installation, as well as rectifier considerations and interpretation of tube data.

Over 180 types of transmitting tubes and related rectifier tubes are included in the Technical Data Section, which gives maximum ratings, characteristics, typical operating values, and curves. Presented in easy-to-understand style, "RCA Transmitting Tubes (TT-5)" represents a valuable reference work that belongs in every ham shack. You can obtain a copy from your RCA tube distributor or by sending $1.00 to Commercial Engineering, RCA Electronic Components and Devices, Harrison, N. J.

From your local RCA distributor, headquarters for RCA receiving and power tubes.

RCA HAM TIPS is published by RCA Electronic Components and Devices, Harrison, N.J. It is available free of charge from RCA distributors.

WHEN MAILING
PLACE POSTAGE HERE

HAM TIPS

A PUBLICATION OF RCA ELECTRONIC COMPONENTS AND DEVICES

VOL. 23, NO. 4 FALL, 1963

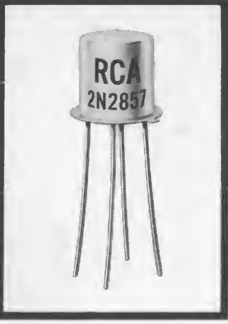

A LOW-NOISE UHF TRANSISTOR AMPLIFIER

By W. A. Pond (WA2JXO), P. E. Kolk, and T. J. Robe*

RCA Electronic Components and Devices

RCA's recently announced 2N2857 npn silicon transistor opens new possibilities in the construction of extremely low-noise UHF transistor receivers and converters for mobile and fixed-station operation.

The 2N2857 utilizes a new miniature electrode structure which provides a very low noise figure (4.5 db max at 450 megacycles), high power dissipation capability (200 milliwatts at 25° C free air temperature and 300 milliwatts at 25° C case temperature), very low leakage at high temperatures, and very small variation in noise figure with temperature (±0.5 db from −40° to +100° C). Under typical operating conditions in 30- or 60-megacycle intermediate-frequency amplifier applications ($V_{CC} = 6$ volts, $I_C = 1$ milliampere, and $R_G =$ 400 ohms), the noise figure of the 2N2857 can be as low as 2db. A 15-db gain and 7.5-db noise figure can be realized in 450-to-30 megacycle converter service.

Designed for UHF, specified for UHF, and 100%-tested for UHF, the RCA-2N2857 can be operated as a common-base oscillator to 1,500 megacycles, and as an amplifier to 1,000 megacycles.

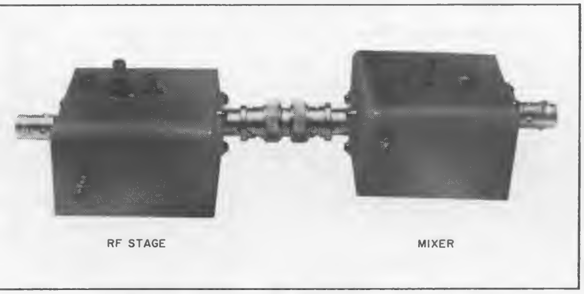

Figure 1: Authors' low-noise UHF transistor amplifier showing two basic chassis (single-stage amplifier, left, and converter, right) as combined unit.

If you were among those who attended the 1962 ARRL Convention in Portland, Ore., you may have seen the demonstration of RCA's new 2N2857, a silicon low-noise VHF/UHF transistor used as an amplifier in a 450-megacycle receiver application.

Among the characteristics of the 2N2857 at 450 megacycles are its unneutralized wideband (approximately 50-megacycle) power gain of 8 db, its neutralized narrow-band (approximately 8-megacycle) power gain of 15 db, and its low noise figure of 4.0 db.

At the show, a single unneutralized common-emitter rf stage was the main unit of demonstration. In addition, a single-stage self-oscillating converter using the 2N2857 was utilized to facilitate detection by a com-

---

*Commercial Receiving Tube and Semiconductor Division, Somerville, N. J.

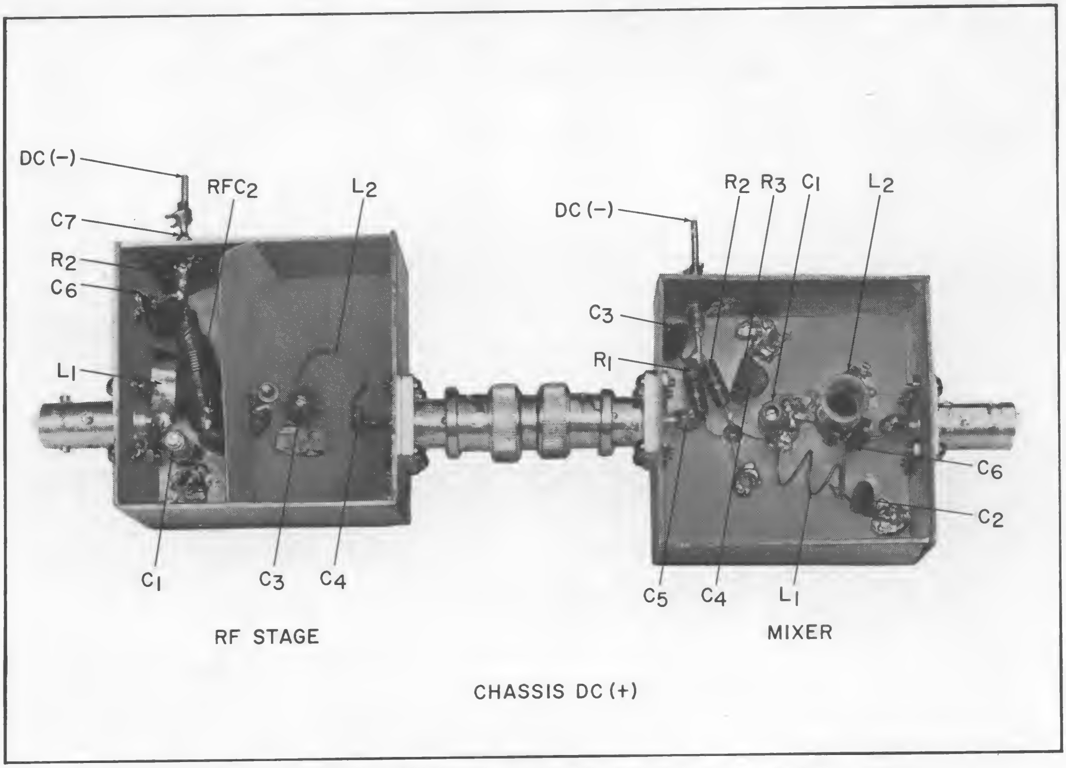

Figure 2: Bottom view of single-stage amplifier chassis, left, and converter chassis, right.

mercial communications receiver at 29 megacycles.

Figure 1 shows the two basic chassis connected. The single-stage amplifier chassis is at the left, and the converter is in the small chassis at the right. A bottom view of these chassis is shown in Figure 2. The tuning inductors in the amplifier stage are lengths of thin copper ribbon curved to approximate a semicircle. These strips, which represent approximately 20 nanohenries of inductance, are relatively high-Q coils. This condition does not mean that the over-all Q of the circuit is high, but only that there are negligible losses in these elements. In fact, in view of the level of reactance chosen (20 nanohenries), and the low parallel input and output resistance of the device at 450 megacycles, the loaded Q of the input tuning circuit is extremely low and that of the output circuit moderate. Accordingly, the input tuning should be used primarily for matching the device to the antenna or source impedance. The output tuning of the stage sets the selec-

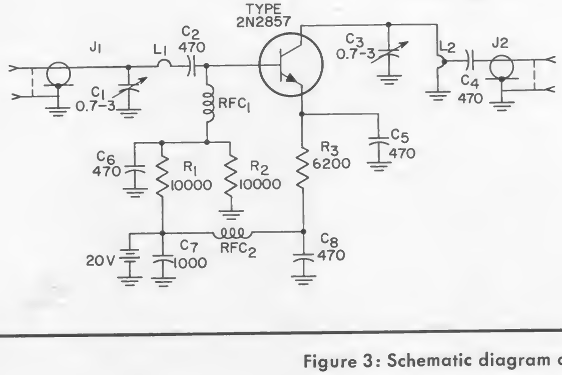

C_1, C_3—0.7-3 pf ceramic disc (Erie 535C or equiv.)

C_2, C_4, C_5, C_6, C_8—470 pf ceramic disc (Erie ED470 or equiv.)

C_7—1,000 pf feedthrough (Erie 2404-102 or equiv.)

J_1, J_2—Coaxial chassis connector BNC

L_1, L_2—½ turn, ¼-inch-wide by 1½-inch-long copper foil

RFC_1, RFC_2—0.2 μh

R_1, R_2—10,000 ohms, ¼ watt

R_3—6,200 ohms, ¼ watt

Figure 3: Schematic diagram and parts list of unneutralized rf stage.

C_1—0.7-3 pf ceramic disc (Erie 535C or equiv.)
C_2—33 pf ceramic disc (Erie ED33 or equiv.)
C_3—1,000 pf feedthrough (Erie 2404-102 or equiv.)
C_4—1,000 pf ceramic disc (Erie ED1000 or equiv.)
C_5—470 pf ceramic disc (Erie ED470 or equiv.)
C_6—0.01 μf ceramic disc (Erie ED 0.01 or equiv.)
L_1—2 turns, #22 AWG, 1/4 inch by 5/8 inch
L_2—8 turns, #22 AWG, 9/32-inch form, 1/2-inch long, powdered iron slug
R_1—3,000 ohms, 1/2 watt
R_2—12,000 ohms, 1/2 watt
R_3—33,000 ohms, 1/2 watt

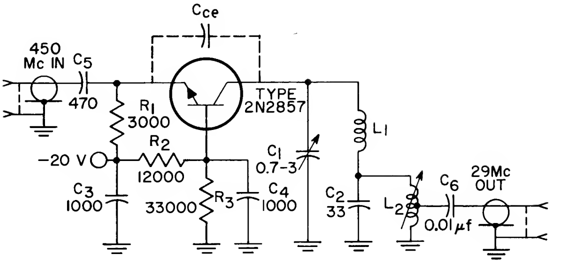

Figure 4: Schematic diagram and parts list of self-oscillating mixer.

C_1, C_2—0.8-8 pf (JFD VC11G or equiv.)
C_3, C_4—0.7-3 pf (Erie 535C or equiv.)
C_5, C_6, C_7, C_8—500 pf ceramic disc (Erie ED500 or equiv.)
J_1, J_2—Coaxial chassis connector BNC
L_1, L_2—1/2 turn, 1/4-inch-wide by 1 1/2-inch-long copper foil
L_3—1/2-turn, #12 AWG Bus wire
RFC_1—0.2 μh phenolic core
R_1—6,800 ohms, 1/4 watt
R_2—2,700 ohms, 1/4 watt
R_3—1,000 ohms, 1/4 watt

Neutralization Procedure:

1. Connect a 450-megacycle signal generator (with Z_{out}=50 ohms) to the input terminals of the amplifier.
2. Connect a 50-ohm rf voltmeter across the output terminals of the amplifier.
3. Apply the supply voltage (—8 volts) and, with the signal generator adjusted for 10-millivolt output, tune C_1, C_2 and C_3 for maximum output.
4. Interchange the connections to the signal generator and the output indicator.
5. With sufficient signal applied to the output terminals of the amplifier, adjust C_4 for a minimum indication at the input.
6. Repeat steps 1, 2, and 3 to determine whether re-tuning is necessary.

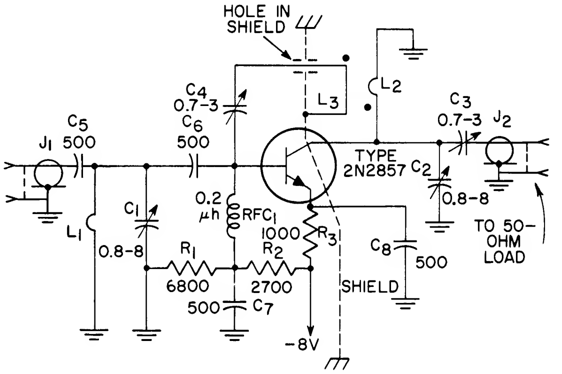

Figure 5: Schematic diagram and parts list of neutralized rf stage.

RCA-2N2857 NPN Silicon Transistor Electrical Specifications

BV_{CBO}	at $I_C = 1\,\mu a$	30 volts min.
BV_{CEO}	at $I_C = 3$ma	15 volts min.
BV_{EBO}	at $I_E = 10\,\mu a$	2.5 volts min.
I_{CBO}	at $V_{CB} = 15$ volts	0.01 μa max.
h_{FE}	at $V_{CE} = 1$ volt $I_C = 3$ ma	30—150
h_{fe}	at $V_{CE} = 6$ volts, $I_C = 5$ ma, f=100 Mc	10—19
G_{pe} (neut. power gain)	at $V_{CE} = 6$ volts, $I_C = 1.5$ ma, f=450 Mc	12.5—19 db
N.F. (Noise Figure)	at $V_{CE} = 6$ volts, $I_C = 1.5$ ma f=450 Mc	4.5 db max.

tivity by choice of appropriate reactance level, i.e., the reactance of the parallel tuning capacitance or inductance at resonance.

Figure 3 shows the single-stage amplifier, which uses a pi-matching network at the input consisting of the parallel tuning capacitor, the series inductance copper strip, L_1, and the parallel input capacitance of the transistor. The output is simply a tuned tank circuit having the inductance tapped to match the parallel input resistance of the following stage. An alternate method of matching to the next stage is to place a small variable capacitor (0.8—8 picofarads) in series from the collector side of the tank to the next stage. It should be realized that this approach, in effect, places additional capacitance in parallel with the tank inductance and, consequently, may require a smaller value of inductance, L_2, to resonate at the desired frequency. The parallel input capacitance of the converter is tuned out as part of the over-all tank capacitance of the previous stage.

Figure 4 shows the self-oscillating mixer employing the 2N2857. This circuit oscillates because of the capacitance feedback within the transistor, and is frequency- dependent on the L_1-C_1 tank circuit. C_2 has small reactance compared to L_1 at the radio frequency, but resonates with L_2 at the intermediate frequency.

UHF gain up to 19 db can be obtained from the 2N2857 in the 450-megacycle neutralized circuit shown in Figure 5—if the neutralizing capacitance, C_4, is carefully adjusted. The feedback coupling loop, L_3, is a piece of No. 12 AWG copper wire running parallel to and approximately 1/4 inch from L_2. One end of L_3 is connected to the grounded shield; the other end passes through a hole in the shield to the neutralizing capacitor. It is important that the ground end of L_3 be placed adjacent to the signal end of L_2 to achieve the phase reversal necessary for neutralization.

All of the circuits described have standard mica-filled phenolic transistor sockets designed to accommodate leads arranged in 0.1-inch pin circle. A suitable socket is the Elco 3307 or equivalent. The transistor leads should be cut to about 1/4 inch for best operation. All components connected to the transistor should be mounted as close as possible to the socket to reduce the effects of stray reactances.

! ATTENTION HAMS !

Interested in a handy guide of metric-system terminology? You may find the following table a useful addition to your literature reference file.

Metric System Unit Prefixes

Prefix	Abbreviation	Meaning
pico-	p	10^{-12}
nano-	n	10^{-9}
micro-	μ	10^{-6}
milli-	m	10^{-3}
centi-	c	10^{-2}
deci-	d	10^{-1}
deca-	da	10
hecto-	h	10^{2}
kilo-	k	10^{3}
mega-	M	10^{6}
giga-	G	10^{9}
tera-	T	10^{12}

From your local RCA distributor, headquarters for RCA receiving and power tubes.

RCA HAM TIPS is published by RCA Electronic Components and Devices, Harrison, N. J. It is available free of charge from RCA distributors.

WHEN MAILING
PLACE POSTAGE HERE

HAM TIPS

A PUBLICATION OF RCA ELECTRONIC COMPONENTS AND DEVICES

VOL. 24, NO. 1 ©1964, RADIO CORPORATION OF AMERICA WINTER, 1963-64

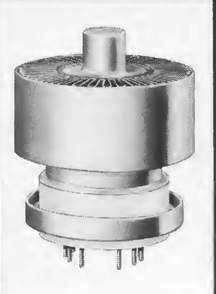

300-Watt-Output, 432-Mc Amplifier

Utilizes RCA-8122 for Class C Operation

By John M. Filipczak, K2BTM*

RCA Electronic Components and Devices

The author considers the RCA-8122 an ideal choice for use as a class C amplifier in transmitters operating in the frequency range from 400 to 500 megacycles.

One of the most versatile and reliable beam-power tubes ever offered to promote high-efficiency operation on amateur UHF, this ceramic-metal type offers the ham outstanding performance characteristics at an attractive price.

Ceramic-metal construction, combined with RCA's exclusive grid-making technique for precision grid alignment, afford this tube exceptional structural and electrical stability.

Featuring a 13.5-volt heater and rated for CW and linear rf service, the 8122 is intended for either mobile or fixed-station operation. High-perveance design helps achieve UHF power output at relatively low plate voltages. At an operating frequency of 470 megacycles, a plate voltage of 2,000 volts, and a current of 0.3 ampere, useful CW power output is 300 watts.

Reduced tube size and increased heat-handling capability further enhance the value of the 8122 in compact, mobile transmitters where space is at a premium.

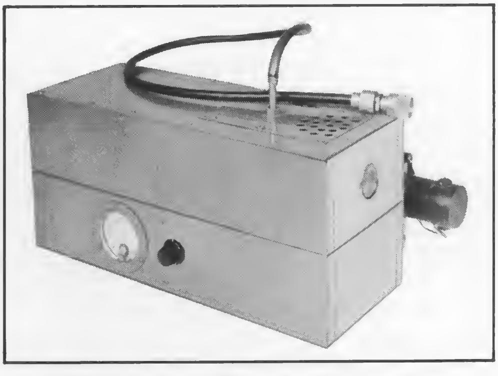

K2BTM's low-cost, 300-watt, 432-Mc amplifier.

Design Features

Figure 1 shows the package layout and Figure 2 the schematic for an RCA-8122 in a class C amplifier designed to operate at 432 megacycles. At this frequency, the output circuit is effectively isolated from the input circuit by the low-inductance ring terminal attached to grid No. 2. Input admittance at the high frequencies is reduced by three separate cathode leads which provide a low-inductance rf path to ground. One of the cathode leads—preferably the one from the No. 4 pin—can be series-tuned to ground with a small trimmer capacitor. This provides an additional means for broadband neutralization in the upper frequency range of the tube.

The amplifier was designed to be driven by

---

*Commercial Receiving Tube and Semiconductor Division, Harrison, N. J.

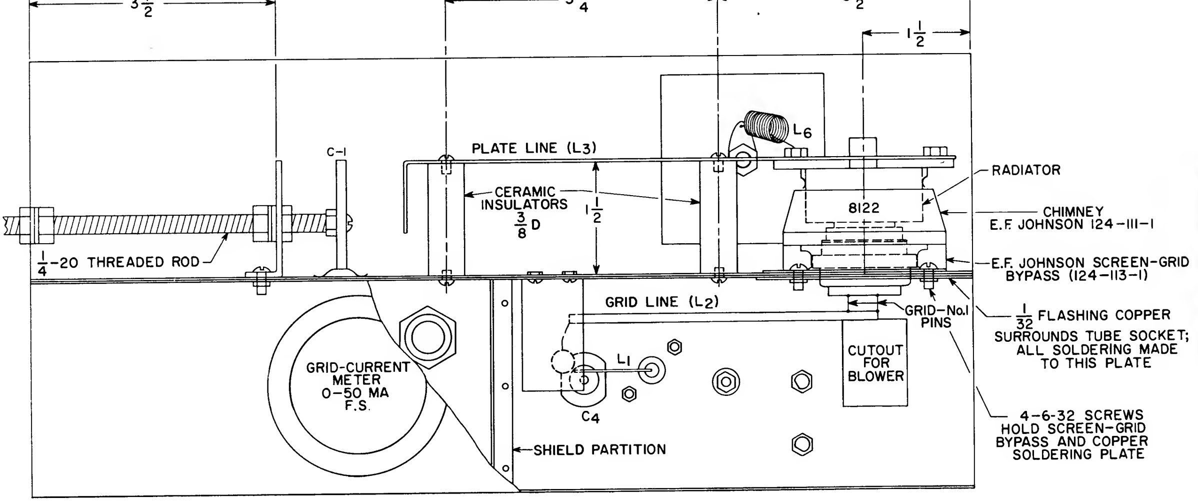

Figure 1: Cutaway view of plate-line and grid-line assembly (all dimensions in inches).

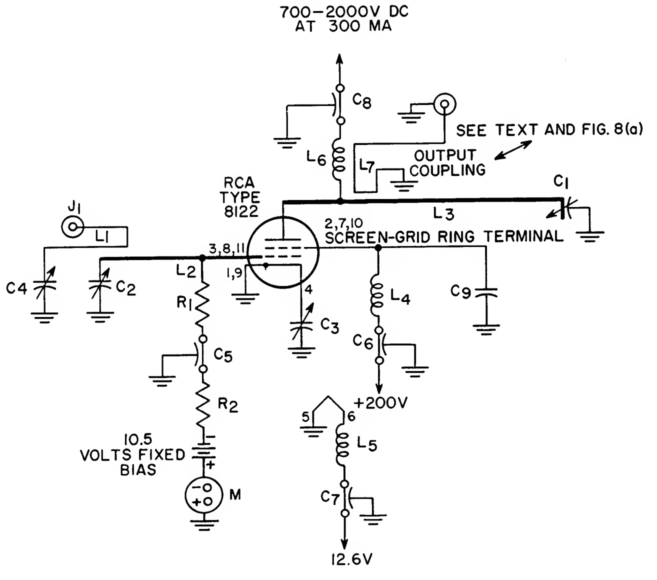

C₁—Refer to text material and Figures 1 and 7

C₂—0.5-3.0 pf, glass-piston capacitor (Erie 680073 or equiv.)

C₃—7-45 pf, trimmer (Erie TS2A-4 or equiv.)

C₄—1.8-9.0 pf, variable (Johnson Midget 160-104 or equiv.)

C₅—1,000 pf, button-type mica capacitor (Erie 662-003-102K or equiv.)

C₆, C₇—1,000 pf, feed-through capacitor (Erie 362-102 or equiv.)

C₈—High-voltage bypass (see Figure 9)

C₉—Screen-grid bypass (E. F. Johnson 124-113-1 or equiv.)

J₁—Coaxial cable connector (UG 290 A/U or equiv.)

J₂—2-wire connector (Amphenol 80PC2F or equiv.)

L₁—See Figure 4

L₂—Flat piece of copper 4-5/16-inches long, ¾-inch wide, and ⅛-inch thick

L₃—See Figures 1 and 6

L₄—Ohmite Z-460 or equiv.

L₅—8 turns of No. 18 enamelled wire, ¼-inch diameter, spaced to 1-inch length

L₆—11 turns of No. 18 enamelled wire, 5/16-inch diameter closewound.

M—Meter, 0-50 ma

R₁—82 ohm, 2 watt

R₂—680 ohm, 1 watt

Miscellaneous—High voltage "THRU" panel insulator (E. F. Johnson 135-42-2 or equiv.); 0-50 ma meter; socket for RCA-8122 (E. F. Johnson 124-311-110 or equiv.); two aluminum chassis, 13-by-5-by-3 inches (Premier ACH-429 or equiv.); ¼-inch shaft-lock bushings (#181, Herman L. Smith, Inc., or equiv.); beryllium finger stock (Instrument Specialties Co., Inc., Little Falls, N. J., 97-115 and 97-136 or equiv.); blower (air-flow-rating 6½ cubic feet per minute minimum); chimney (E. F. Johnson 124-111-1 or equiv.); ceramic insulators (James Millen Company or equiv.).

Figure 2: Schematic diagram and parts list of K2BTM's 300-watt amplifier.

an RCA-6939 twin pentode exciter driver,* but can use any other driving source which operates at the fundamental-amplifier frequency. It is vital, however, that the driving source selected maintain 5 watts of output under the required load.

The RCA-8122 uses a coaxial type of electrode arrangement. When operated as a class C amplifier, the tube is capable of supplying

---

*The RCA-6939 was described by the author in an earlier paper, "Five Watts at 432 Megacycles with the 6939 Dual Pentode," published in "QST" for March, 1962.

300 watts of rf power output (at frequencies up to 470 megacycles) for an input driving power of only 5 watts. It is designed to operate with plate voltages from 700 volts (for 100-watt power output) to 2,000 volts (for 300-watt power output). The high power outputs achieved from relatively low plate voltages and driving power are made possible by the tube's high power sensitivity and perveance.

The RCA-8122 requires forced-air cooling during operation. The combined effect of this cooling, plus the heat dissipation capability from its highly efficient radiator, permits the tube to be operated at a maximum plate dissipation of 400 watts without any sacrifice in reliability. At this plate dissipation, the radiator-core temperature is rated at 250° C for the tube's specified air flow of $6\frac{1}{2}$ cubic feet per minute. The radiator-core temperature at maximum plate dissipation can be substantially reduced, however, if the rate of cooling is increased. The blower for the 8122 may be any one of the smaller, commercially available types.

Circuit Details

The control grid (grid No. 1) of the amplifier tube is connected to a half-wavelength strip line which is tuned at its open end by a glass-type piston-adjusted capacitor. This grid line is made from a piece of flat copper $\frac{1}{8}$-inch thick which reduces rf losses and helps maintain the grid temperature at a safe level.

A combination of fixed (10.5-volt battery) and grid-leak bias is used in the circuit. The fixed bias makes certain that the tube will be operated within a safe range of dissipation should the driving power fail. The input-coupling link (L_1) is series-tuned to reduce reactance and provide optimum coupling between the driver and grid No. 1 of the 8122.

Cathode pins 1 and 9 are grounded to the chassis. The remaining cathode pin (No. 4) is then series-tuned to ground with a small trimmer capacitor to provide the required neutralization adjustment at 432 megacycles.

The screen grid (grid No. 2) is bypassed to ground at the operating frequency by a screen-ring capacitor (E. F. Johnson type No. 124-113-1 or equivalent). Additional neutralization of the amplifier circuit may be obtained by eliminating one or more of the screen-ring contact fingers. This effect is most easily accomplished by separating the contact finger from the screen-ring terminal on the tube with 0.01-inch-thick Teflon strips. The number of fingers that must be insulated is determined by the compensation necessary to obtain complete neutralization. Requirements for neutralization vary among different amplifiers. In some cases, none of the contact fingers need be insulated. In any event, since insulation can be easily added after the package has been completely assembled, it should be avoided unless shown absolutely necessary by a neutralization check.

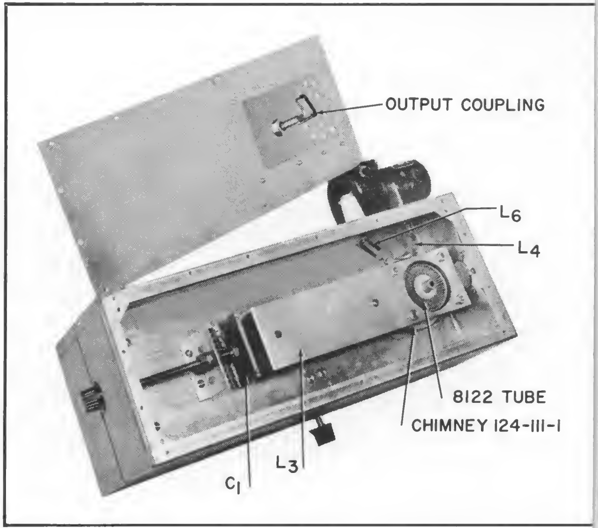

Top view of amplifier showing plate-line assembly.

The plate line is the most critical part of the amplifier circuit, and must maintain low-loss contact with the plate to insure satisfactory performance at the desired operating frequency. The plate line is a half-wavelength strip line tuned at its open end by a specially constructed tuning capacitor. This capacitor, C_1, is shown in Figure 1, and the details of its construction are outlined in the section that follows.

Power may be transferred from the plate line to the load through either a link coupling

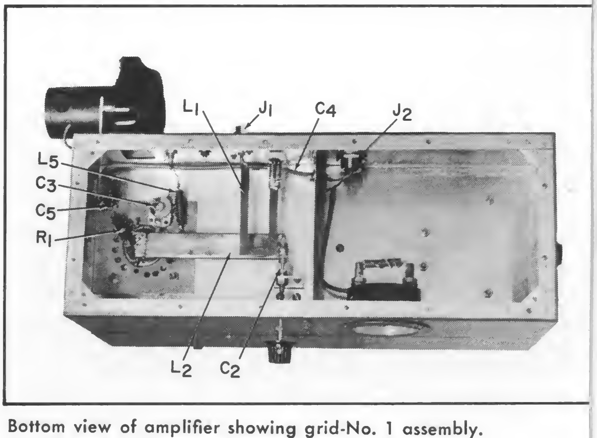

Bottom view of amplifier showing grid-No. 1 assembly.

or capacitive-probe coupling. The latter is preferable because it provides greater flexibility of adjustment.

Mechanical Construction

The illustrations accompanying this article offer data you need for construction of the amplifier "package."

As shown in Figure 1, the amplifier is mounted in two standard aluminum chassis, each of which is 13 inches long, 5 inches wide, and 3 inches deep. The chassis are fastened back-to-back to provide separate compartments for the grid and plate lines. Thus attached, all mounting holes with the exception of the tube-socket holes (whose diameters for the two chassis differ) may be drilled to size. A ⅛-inch pilot hole is drilled through both chassis to correctly center the socket holes for accurate punching to final size. After all mounting holes have been drilled, the chassis are detached from each other, and holes for the tube socket punched in each chassis. This can be done in the sizes required with Greenlee type of socket punches. The outline of the plate chassis (Figure 3) indicates the sizes and locations of the socket holes for both chassis. The ventilation holes surrounding the socket holes should be punched through both chassis while they are fastened together. Locations and sizes of all other chassis holes are shown in Figures 1 and 4.

All electrical ground connections are soldered to a piece of flashing copper which surrounds the base of the tube socket. This piece of copper is held to the base of the grid-line compartment by the four No. 6-32 screws that also hold the E. F. Johnson screen bypass ring, which is located in the plate-line compartment.

The grid-No. 1 line is held in place by soldering one end to the tab of the piston capacitor, C_2. The remaining end is soldered to the three grid-No. 1 socket pins, as shown in Figures 1 and 4. An aluminum bracket, $1/16$-inch thick, holds the grid-tuning capacitor, C_2, in position. The center of C_2 and the bushing holding the tuning shaft must line up if smooth tuning is to be obtained. A shield (see Figure 1) is placed in the grid compartment to isolate the grid-current meter from the RF field. The shield also reduces the size of the grid section, thereby increasing the efficiency of "pressurized" cooling.

Before the tube socket is assembled, all screen-contact tabs should be removed from the socket—that is, from pins 2, 7, and 10. The dc connection to the screen grid is made in the plate compartment. Figure 5 shows the method used for the dc connection to the screen grid.

Details for the construction of the plate line are shown in Figures 1 and 6. The bracket assembly that guides the No. ¼-20 threaded plate-capacitor tuning shaft should be constructed close to the dimensions shown in Figure 7. An improperly constructed bracket will result in an erratic ground for the plate-tuning assembly. The distance of the plate line from the ground reference should be the required 1½ inches. This distance provides the correct surge impedance and resonant frequency of the strip line with the top cover in place.

The B+ choke is connected to the plate line by one of the screws which hold the plate assembly together. This connection is shown in the photograph on page 3. The B+ choke is connected at the low-voltage, high-current point of the plate line. The output-coupling probe shown in Figure 8(a) is located in this area. The specially constructed high-voltage bypass capacitor consists of a 1/32-inch brass plate insulated from the chassis by a 0.006-inch-thick piece of mica insulation (see Figure 9). The value of the bypass capacitance is sufficiently great to make it essentially a short circuit at the operating frequency.

The ¼-inch shaft-lock bushings are also used for guiding the shaft for the plate-tuning capacitor. These bushings (No. 181, Herman L. Smith, Inc., or equiv.) are ideal for this application because they can be adjusted to provide the amount of "drag" or tension required to sustain a good contact.

The soldering of the finger stock to the plate assembly can be simplified by use of a tapered wooden plug as shown in Figure 10. The plug will hold the finger stock in place and prevent excessive heat absorption during the soldering operation.

Operation and Tuning

Adherence to the following procedures and instructions is recommended to assure safe and satisfactory operation of the amplifier circuit:

1. All plate-supply voltages in the range specified for the operation of the RCA-8122 are high enough to represent a potential danger to human life. Therefore, as a safety precaution, all supply voltages should be interlocked.

2. In the proposed application, the heater power for the RCA-8122 should be 12.5 volts, ac or dc, at 1.3 amperes. After the heater

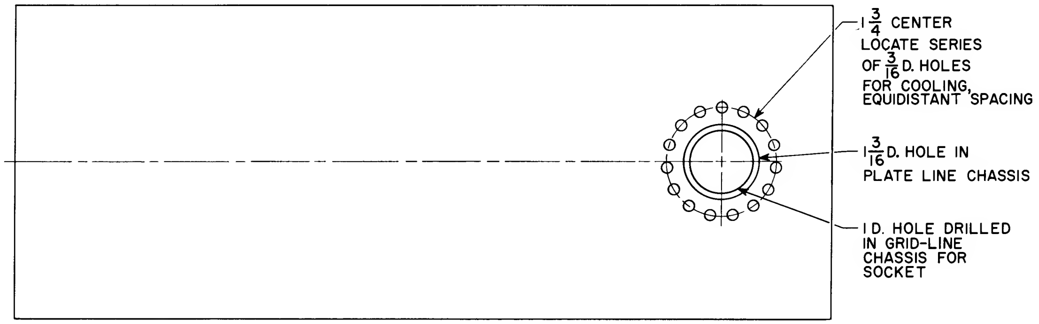

Figure 3(a): Details of vent and socket holes.

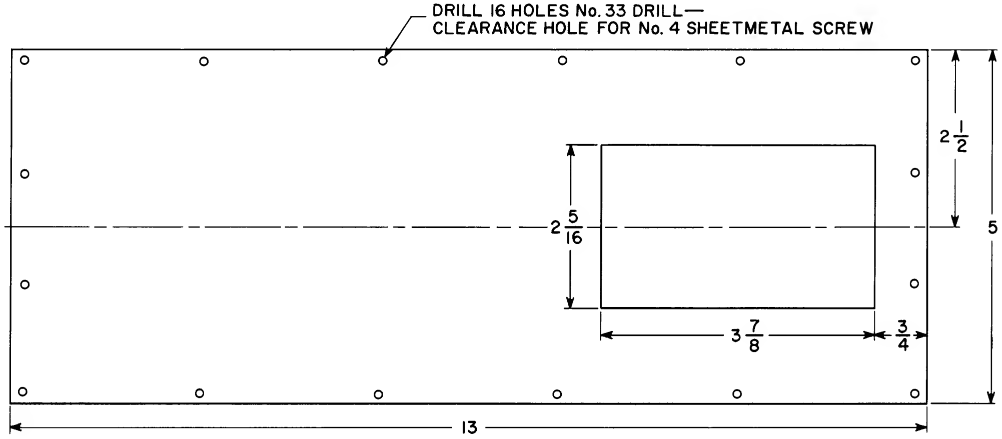

Figure 3(b): Details of top cover for plate-line chassis.

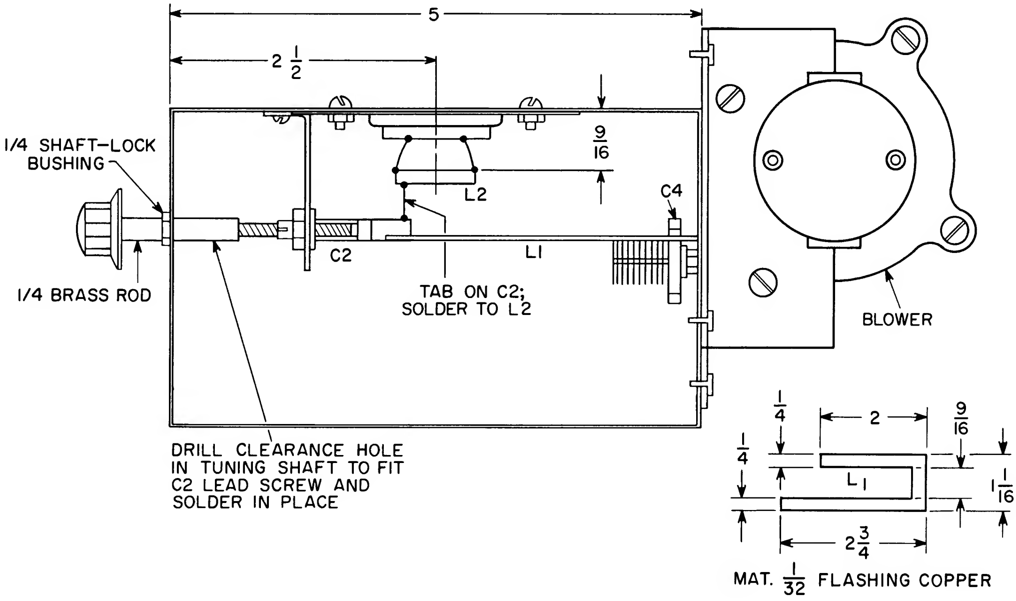

Figure 4: Side view of grid-No. 1 compartment, including details of L_1 construction.

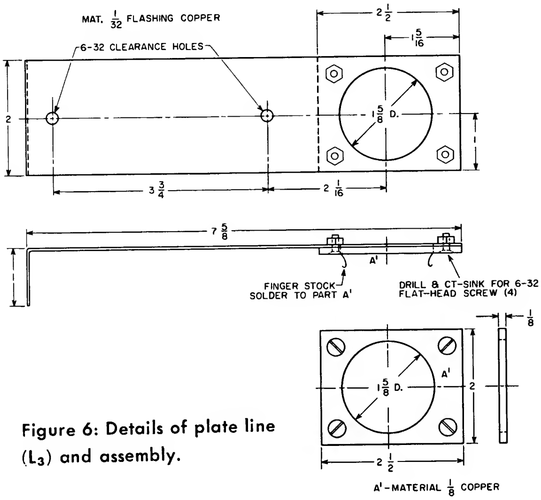

Figure 6: Details of plate line (L_3) and assembly.

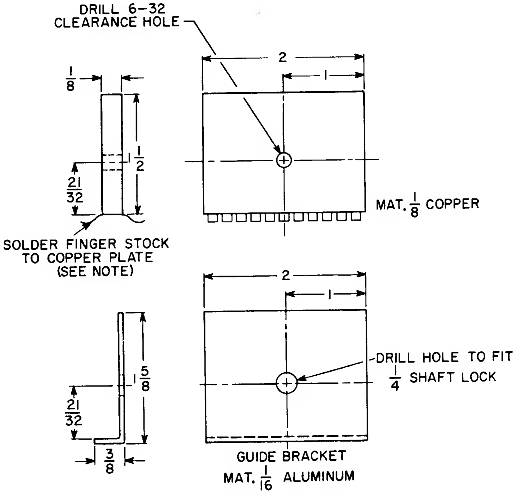

Figure 7: Details of C_1 construction.

Note: beryllium finger stock (Instrument Specialties Co., Inc., 97-115 or equivalent).

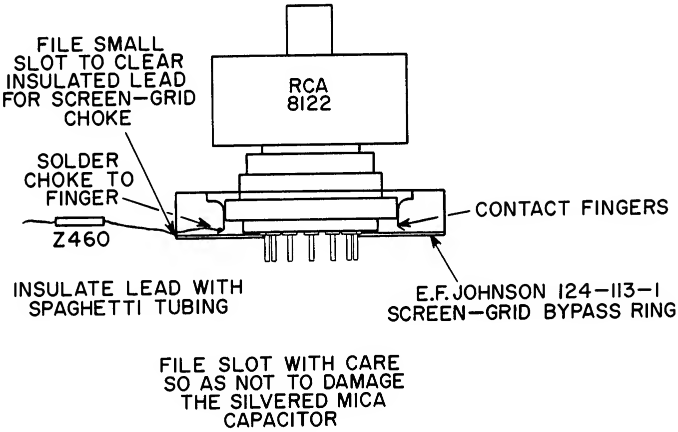

Figure 5: Procedure for making electrical connection to grid No. 2.

power is applied, the tube should be allowed to warm up for at least one minute before the plate voltage is applied. This procedure will help assure substantially longer tube life.

3. All tests for neutralization and tuning should be made with both grid- and plate-compartment covers in place.

The general procedure for preparing the amplifier for operation is as follows:

After a sufficient heater-warmup period has been allowed, the driving power is applied to the amplifier circuit without plate or screen-grid voltage supplied to the tube. The grid-No. 1 current meter should indicate approximately 30 to 35 milliamperes of current for 5 watts of drive power. If the grid current is insufficient, the following adjustments should be made:

1. The cathode neutralizing capacitor, C_3, should be adjusted for maximum grid current. Approximately one-half the total capacitance should be sufficient to provide the required indication, although further adjustments of C_3 may be necessary upon application of plate and screen-grid voltages.

2. Position the input-coupling link, L_1, for maximum grid current and a minimum input standing-wave ratio. The grid-line tuning capacitor, C_2, and the input-line capacitor, C_4, must be adjusted simultaneously with the positioning of L_1 with respect to the grid line. A standing-wave-ratio bridge inserted between the driver and L_1 will make the preceding adjustments much simpler.

After the input coupling has been properly adjusted, a preliminary check of the ampli-

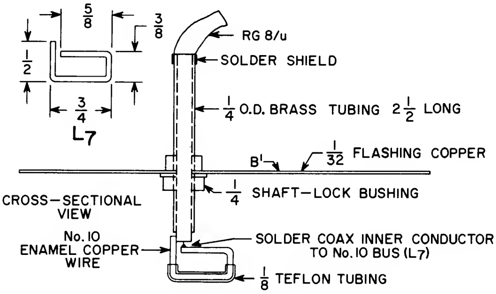

STRIP COAX CABLE FROM END 2 3/4.
COMB, BRAID BACK, AND INSERT INNER POLY. INSULATOR THROUGH BRASS TUBE; SOLDER BRAID AND No.10 BUS (L7) IN PLACE.

Figure 8(a): Construction details for coupling probe.

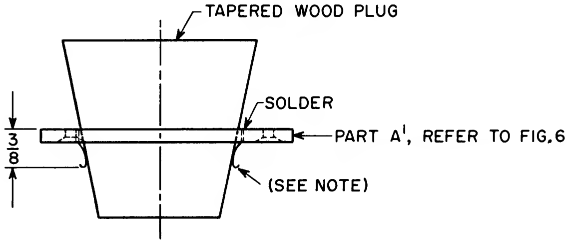

Figure 10: Recommended procedure for soldering finger stock to A' of plate-line assembly.

Note: 3/8-wide beryllium finger stock (Instrument Specialties Co., Inc., 97-136 or equivalent).

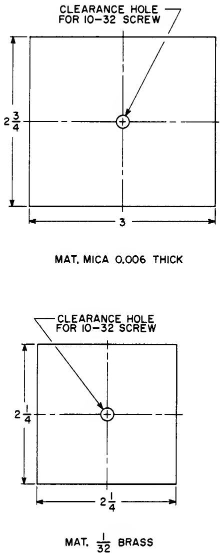

Figure 9: Details of high-voltage capacitor.

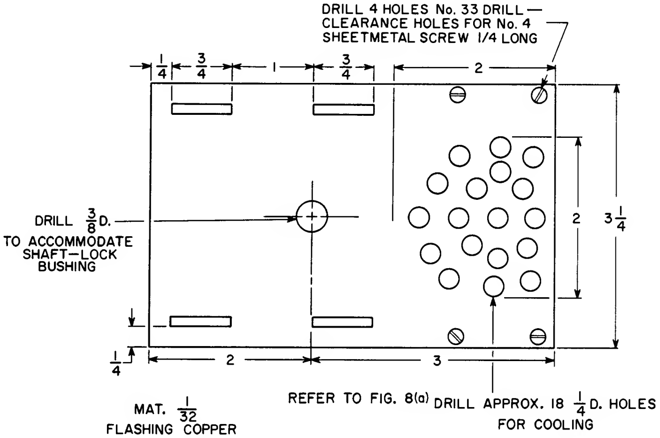

Figure 8(b): Cover for plate-line compartment showing vent holes and location of hole for coupling probe.

fier neutralization should be made as follows:

Adjust the plate-tuning capacitor, C_1, throughout its range and observe grid-No. 1 current. No change in grid current should occur as C_1 goes through resonance. If there is any noticeable change, readjust C_3 slightly. If the condition persists, further neutralization is accomplished by insulating one or more fingers of the E. F. Johnson bypass ring from the screen-ring terminal of the tube. Small pieces of 0.010-inch-thick Teflon can be used for this purpose. Generally, no more than two fingers should have to be insulated to obtain complete neutralization. The insulation of more than two fingers can result in self-oscillation, which is indicated by excessive grid-No. 1 current.

In the next stage of the amplifier-circuit preparation, terminate the output-coupling probe with a 50-ohm load,* and apply dc voltages to the plate and screen grid of the tube from a variable supply. Begin with 700 volts on the plate and something less than 200 volts on the screen. The plate capacitor is then tuned to resonance and the probe coupling adjusted, simultaneously, for maximum power output. Maximum power output does not necessarily occur at minimum plate current; therefore, some form of output-power measuring device is required.

At resonance with 700 volts on the plate and 200 volts on the screen grid, the power output should be approximately 100 watts.

---

*The 50-ohm load must be suitable for use in the 400-to-500-megacycle frequency range and capable of dissipating 300 watts of power.

The plate current should be in the range from 260 to 300 milliamperes. Grid-No. 1 current should be between 25 to 30 milliamperes. If grid-No. 1 current is found to be higher than 35 milliamperes at this point, recheck for neutralization. When the plate potential is increased to 1,500 volts, the power output will be approximately 235 watts. For a plate potential of 2,000 volts, the power output will be 300 watts for 600-watt input.

Antenna and Feedline System

The antenna and feedline used with the amplifier unit must be judiciously selected if the desired output is to be obtained without the cost of the system becoming exorbitant. A recommended arrangement that is relatively inexpensive and provides a low-loss antenna feed is described as follows:

In this arrangement, an antenna that presents a 300-ohm load impedance should be used. The main portion of the feedline, which will extend from the antenna into the "shack," can then be a low-loss, 300-ohm, open-wire line or one of the better-quality, television-transmission lines. This 300-ohm line must be connected to the amplifier through a 4-to-1 balun, which may be constructed from Rg-11/U coaxial. (For instruction on balun construction, refer to ARRL Handbook.) This balun is needed to provide the impedance transformation of 300 to 50 ohms required to match the antenna system to the power amplifier. The advantage of this arrangement is that the length of coaxial cable used in the feed system need not be longer than 5 or 6 feet. The use of Rg-8/U cable in lengths greater than 6 feet is not recommended because of the high attenuation factor of this cable at 450 megacycles.

There are several commercially available very-low-loss, 50-ohm coaxial cables that would be highly suitable for use as antenna feedlines for the power amplifier; however, they are substantially more expensive than the more common Rg-8/U cable or open-wire type of line. A typical example of a very-low-loss, 50-ohm coaxial cable is Foam Heliax, which is manufactured by the Andrew Corporation. This cable has an attenuation of only 1.25 db per 100 feet at 450 megacycles. The Rg-8/U has a loss figure of 5db per 100 feet at 450 megacycles. These figures indicate that the losses in a feedline made of Rg-8/U cable would be more than twice those in a feedline made from Foam Heliax.

The importance of the type of feedline used between the amplifier and the antenna—as well as the method of its employment—cannot be emphasized too strongly. With a loss of 3 db in the feedline, only half of the tube power output will be delivered to the antenna.

GEORGE D. BARBEY CO., INC.
Reading Pottstown
Lancaster Lebanon

WHEN MAILING
PLACE POSTAGE HERE

From your local
RCA distributor,
headquarters for
RCA receiving
and power tubes.

RCA HAM TIPS
is published by RCA
Electronic Components
and Devices, Harrison,
N. J. It is available
free of charge from
RCA distributors.

HAM TIPS

A PUBLICATION OF RCA ELECTRONIC COMPONENTS AND DEVICES

VOL. 24, NO. 2 ©1964, RADIO CORPORATION OF AMERICA SPRING, 1964

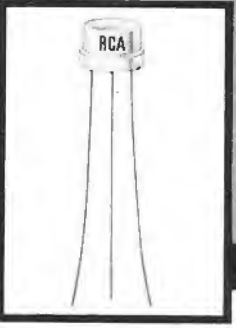

A TRANSISTORIZED KEYER

By George D. Hanchett, W2YM*

RCA Electronic Components and Devices

The subject of semi- and fully-automatic keying has long held considerable fascination for the author, who has traced its development since introduction of the electronic semiautomatic key, or "bug," in the middle thirties. Various developments since then have resulted in numerous and sundry systems, all employing either relays or combinations of electron tubes and relays to perform the keying function. To the author, it seemed that the next logical step in the evolution of keying systems should be the design and construction of a practical transistorized electronic keyer. The compact unit described in this article represents his efforts in that direction.

The transistorized keyer may be operated either as a semi-automatic key (automatic dots) or as a fully automatic key (automatic dots and dashes). The keying function is performed by a high-speed relay, which is located at the output of the unit so that the keyer will be electrically isolated from the circuits being keyed. A double-pole relay is employed so that one set of relay contacts may be used to mute the receiver during the key-down condition. Keying speed is controlled by a voltage source in order to permit the use of a single potentiometer instead of the ganged dual potentiometer usually required for this purpose. Another feature of the keyer is the built-in tone oscillator which allows the operator to monitor his keying at all times.

W2YM's transistorized keyer can be operated either as a semi-automatic "bug" key or fully automatic key. Instrument is shown here with a Vibroplex "Vibro-Keyer" connected to it. Standard hand key can be connected to two binding posts at left.

Circuit Details

The schematic and parts list of the transistorized keyer appear in Figure 1. The actual keying circuits consist of a free-running multivibrator, a flip-flop multivibrator, an OR gate, and a transistor-controlled relay circuit. A half-wave rectifier provides the DC voltage to control the keying speed, and a voltage doubler from the 6.3-volt winding of the power transformer provides the DC supply voltage for the unit. A tone oscillator provides an audible indication of the keying.

The dot multivibrator, as its name implies, controls the formation of the dots, and the repetition rate of this multivibrator determines the rate at which the dots are produced and hence the speed of the keying. When the "Vibro-Keyer," S_1, is in the open position, the multivibrator is held inoperative (transistor Q_2 is not conducting) by the biasing action

---

*Commercial Receiving Tube and Semiconductor Division, Somerville, New Jersey

of clamp-transistor Q_3. When the paddle of S_1 is moved to the dot position, the clamp-transistor becomes inoperative, and the dot multivibrator becomes a free-running circuit. The square-wave signal developed at the emitter of multivibrator transistor Q_2 is then applied to the base of transistor Q_7 in the OR gate. During the positive alternation of this signal, the OR gate will permit current to flow through the relay-control transistor, Q_9, and through the keying relay, K_1, in series with this transistor.

Once a dot is initiated by moving the paddle of S_1 to the dot position, the action will continue—regardless of the position of the paddle—until both the dot and the space that follows it are formed. This feature is provided by the feedback circuit from the base of clamp transistor Q_3 to the collector of multivibrator transistor Q_1, which assures that clamp transistor Q_3 will be held inoperative, and that the operation of the multivibrator—once begun—will continue until a full cycle is completed.

The ratio of the "on time" to the "off time" of the dot multivibrator is controlled by the setting of potentiometer R_5. This ratio is usually referred to as "weight." Thus, R_5 is called the "weight control." In most cases, an operator will want this weight control in the center, or neutral, position, but occasionally it may be desirable to change the ratio of the dot time to space (i.e., under conditions of slow sending, when the change can be readily made).

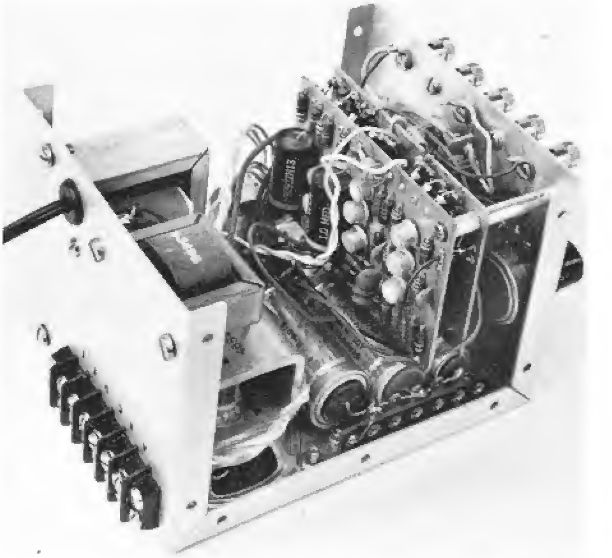

Bottom view of keyer shows location of speaker, transformers, and filter capacitors. Terminals "A" through "F" (left) are connected to the double-pole, double-throw relay contacts.

The rate at which the dots are produced is controlled by the voltage applied to the combination of C_1 and R_4 and combination of C_3 and R_6. The more negative this voltage on the movable arm of R_5, the faster the timing capacitors will charge to the conducting potential of the multivibrator transistor not conducting at that instant. In other words, the greater the multivibrator-repetition rate, the more rapid the keying speed. In the author's model, the maximum charging potential was set at 60 volts. This corresponds to a keying speed of about 40 words per minute.

A keyer of higher speed can be obtained by reducing the value of R_{41} to produce a corresponding rise in the speed-control voltage and keying speed.

The value of R_{41} should not be reduced below 1,000 ohms because the voltage across filter capacitor C_{13} would then exceed its working-voltage rating. If desired, the minimum speed of the keyer (approximately five words per minute) can be decreased by increasing the values of the timing capacitors, C_1 and C_3. To insure good stability, it is important that these timing capacitors be of the paper or plastic type. Electrolytic capacitors are not stable enough for this application.

The discussion of circuit details thus far covered the production of "dots." When a "dash" is to be generated, the paddle of S_1 is pushed to the dash position. The clamp transistors, Q_3 and Q_6, which hold the dot multivibrator and the dash flip-flop inoperative during the "key-open" condition, will not conduct due to the application of increased bias. Consequently, the multivibrator and the flip-flop are allowed to operate simultaneously—a required condition for the formation of a dash.

The output from the emitter of multivibrator transistor Q_2 and that from the emitter of flip-flop transistor Q_5 are applied to the OR-gate transistors, Q_7 and Q_8, respectively. The keying relay is energized during the positive alternation of these signals, whether applied separately or simultaneously. The dashes that are produced are three times as long as the dots—a relationship achieved through timing functions explained in the paragraphs that immediately follow.

Probably the best way to explain the keying function is through a graphical presentation such as Figure 2. Assume, for the purpose of this discussion, that there is no voltage drop across the transistors of the multivibrator and

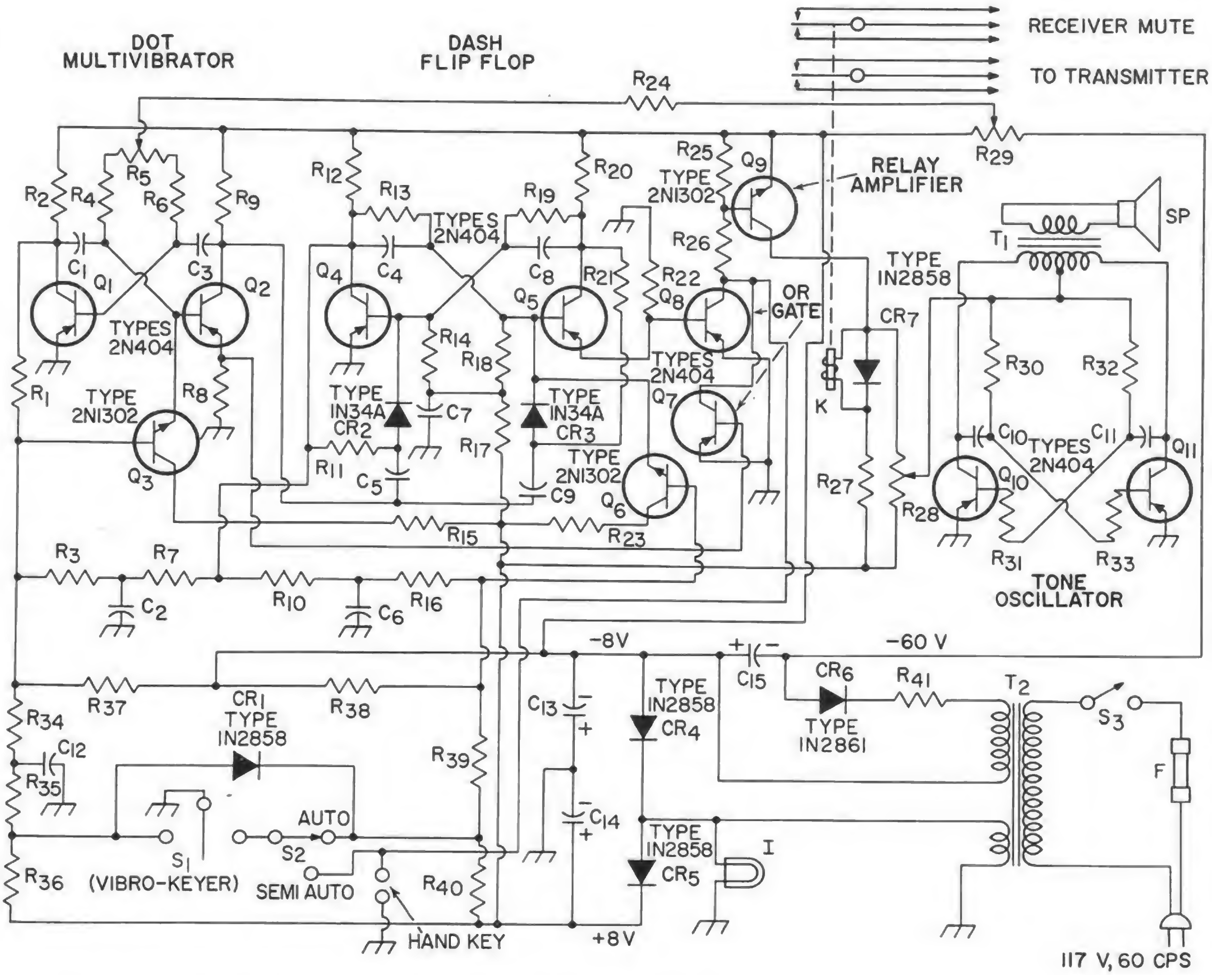

C_1, C_3—1.0 μf paper (or plastic), 200 volts
C_2—0.47 μf, ceramic, 25 volts
C_4, C_8—560 pf, ceramic, 600 volts
C_5, C_9—330 pf, ceramic, 600 volts
C_6, C_7—0.01 μf, ceramic, 50 volts
C_{10}, C_{11}—0.02 μf, ceramic, 50 volts
C_{12}—0.1 μf, ceramic, 50 volts
C_{13}, C_{14}—2,000 μf, electrolytic, 15 volts
C_{15}—16 μf, electrolytic, 150 volts
F—Fuse, 1 ampere
I—Indicator lamp No. 47
K—DC relay; coil resistance—2,500 ohms; operating current—4 ma; Potter-Brumfield ML11D or equiv.
R_1—39,000 ohms, 0.5 watt
R_2, R_9, R_{12}, R_{20}—3,900 ohms, 0.5 watt
R_3, R_{16}—18,000 ohms, 0.5 watt
R_4, R_6—51,000 ohms, 0.5 watt
R_5, R_{29}—Potentiometer, 10,000 ohms
R_7, R_{10}—22,000 ohms, 0.5 watt
R_8, R_{22}, R_{25}—68 ohms, 0.5 watt
R_{11}, R_{21}—15,000 ohms, 0.5 watt
R_{13}, R_{19}—33,000 ohms, 0.5 watt
R_{14}, R_{18}, R_{30}, R_{32}—27,000 ohms, 0.5 watt
R_{15}, R_{23}—270 ohms, 0.5 watt
R_{17}—68,000 ohms, 0.5 watt
R_{24}—100,000 ohms, 0.5 watt
R_{26}—560 ohms, 0.5 watt
R_{27}—1,200 ohms, 0.5 watt
R_{28}—Volume-control potentiometer, 50,000 ohms
R_{31}, R_{33}—10,000 ohms, 0.5 watt
R_{34}—6,800 ohms, 0.5 watt
R_{35}—8,200 ohms, 0.5 watt
R_{36}, R_{39}, R_{40}—15,000 ohms, 0.5 watt
R_{37}, R_{38}—47,000 ohms, 0.5 watt
R_{41}—10,000 ohms, 1 watt
S_1—Vibroplex keyer or equiv.
S_2—Toggle switch; double-pole, double-throw
S_3—Toggleswitch; single-pole, single-throw
SP—Replacement speaker; 3½-inch, 3.2-ohm voice coil, QUAM 3A05 or equiv.
T_1—Push-pull output transformer (14,000 ohms to V.C.), Stancor A3496 or equiv.
T_2—Power transformer, Stancor PS8415, PA8421 or equiv:
  Secondary One—125 v at 15 ma or more;
  Secondary Two—6.3 v at 0.6 ampere or more

Figure 1: Schematic diagram and parts list of W2YM's transistorized keyer.

of the flip-flop when they are conducting. Assume also that the switching time for these transistors is zero (i.e., the transistors can be switched from "off" to "on" or from "on" to "off" instantaneously). As mentioned previously, the keying relay will be energized whenever the positive alternation of the signal from either multivibrator transistor Q_2 or flip-flop transistor Q_5—or both—is applied to the OR gate.

When a dot is being produced, only the dot multivibrator supplies the keying signal to the OR gate. For this condition, OR-gate transistor, Q_7, controls the operation of the relay circuit. The relationship between the current through this transistor and that through the relay are shown by the dot-formation waveforms in Figure 2.

When the paddle of S_1 is positioned to connect the dash contact to ground, the dot contact is also connected to ground through steering diode CR_1—resulting in simultaneous operation of the dot multivibrator and the dash flip-flop. Signals will now be applied to both OR-gate transistors, and the relay will be energized for an interval three times as long as that used to produce a dot. The dash-formation waveforms in Figure 2 illustrate this relationship.

The voltage drop across the keying relay and resistor and R_{27} is the DC supply voltage for transistors Q_{10} and Q_{11} in the tone oscillator. For current to flow through these components, the relay-amplifier transistor, Q_9, must receive a keying signal from the OR gate. The tone oscillator, therefore, operates only when dots or dashes are being produced. Its output is then applied to the speaker to provide an audible indication of the keying. Potentiometer R_{28} controls the volume of this output.

The transistorized keyer may also be operated as a semi-automatic or manual key. In the semi-automatic mode, switch S_2 (see Figure 1) is placed in the SEMI-AUTO position. Although the dots are still produced automatically, the automatic-keying circuits are bypassed when the paddle of S_1 is moved to the

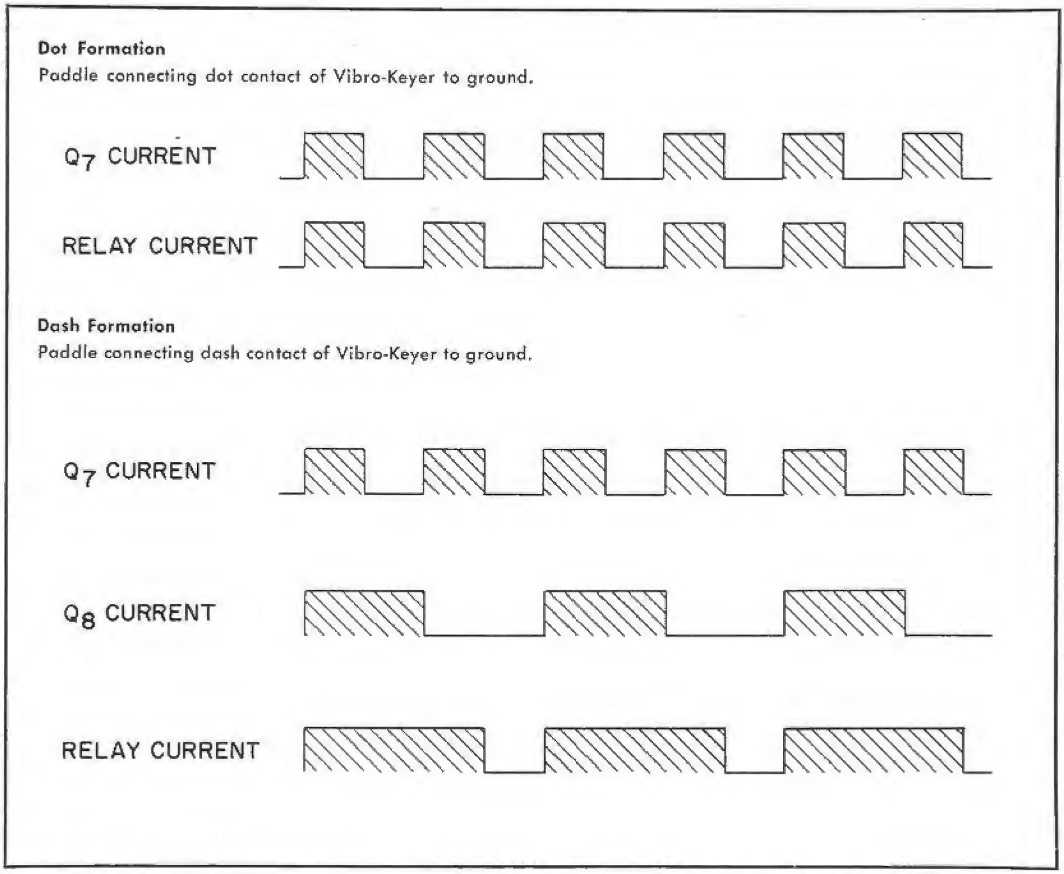

Figure 2: Graphical representation of keying function showing waveforms for Q_7, Q_8, and relay currents.

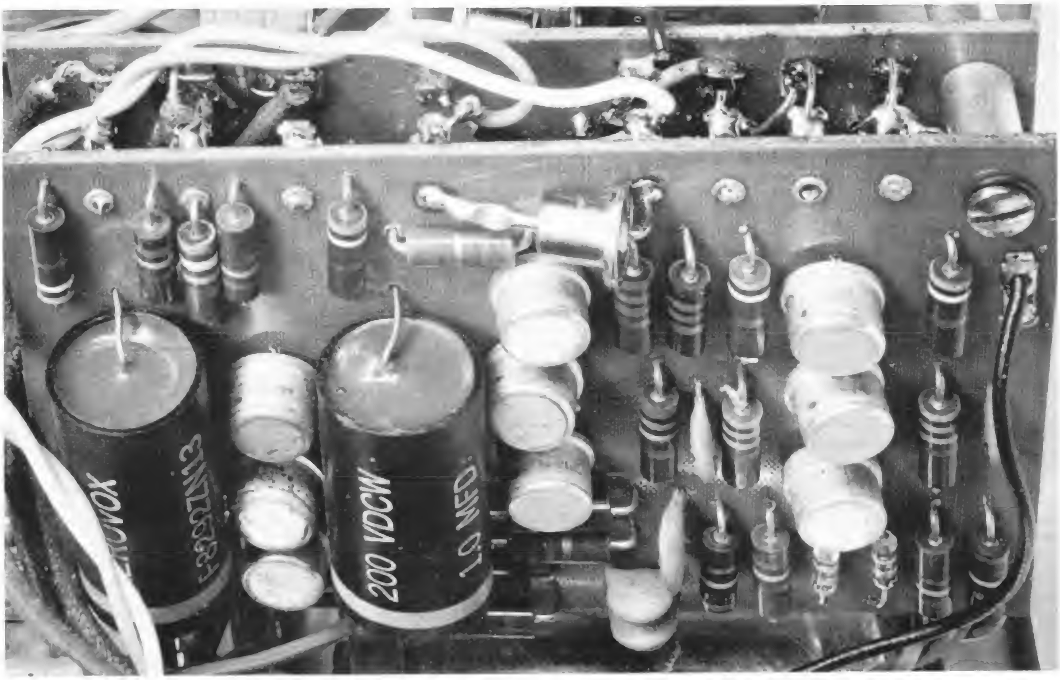

Close-up of transistorized keyer's circuit board showing dot-multivibrator circuit (left) and dash flip-flop circuit (right). Shown in center are three transistors comprising the OR gate and relay control. Board immediately in back includes circuitry for the instrument's side-tone oscillator and biasing network.

dash position, and the dashes must then be produced manually. If desired, a hand key may be connected to the unit (across the terminals marked HAND KEY in Figure 1) so that the automatic-keying circuits can be bypassed when producing both dots and dashes.

Construction

The complete keyer is housed in a miniature aluminum case which is only 4 inches high, 5 inches wide, and 6 inches deep. Internal mounting details for the unit are shown in the photographs on pages 2 and 5.

The major circuitry is mounted on two phenolic boards. One board contains the multivibrator and its clamp transistor, the flip-flop and its clamp transistor, and the OR gate. The other board contains the tone oscillator and voltage bridge for the dot and dash clamp circuits. [*Author's Note:* The voltage bridge and clamp circuits are similar to those used by James C. MacFarlane, W3OPO, in the December, 1962, issue of "QST" magazine.]

The power supply, relay, speaker, output transformer, switches, and potentiometers are all mounted directly to the case. The cone of the speaker is protected from damage by covering it with a small piece of perforated aluminum. In the model constructed by the author, binding posts were used to connect the Vibro-Keyer, S_1, to the automatic keyer, but any method of connection that suits the fancy of the builder would be equally satisfactory.

All relay contacts are brought out to the rear of the keyer and the connections to them are made through a six-terminal Jones strip. This arrangement permits two circuits to be keyed simultaneously. It also allows the relay to provide either normally closed action or normally open action, whichever is preferred. In the unit described here, the second set of contacts are used to mute the receiver during the key-down condition. This feature required that the relay be normally closed. [*Author's Note:* Some relays do not have non-metallic strikers on either the pole pieces or the armature and, consequently, may be sluggish. This condition can be corrected by drilling and tapping the armature and installing a No. 2-56 brass screw. The screw should be adjusted so that about 2 to 6 mils protrudes from the armature. A lock nut should be used to prevent any shift in the position of the screw.]

The transistorized keyer constructed by the author has been in constant use for more than a year. Once an operator becomes familiar with the instrument, he will find it extremely easy to send perfect copy.

WHEN MAILING
PLACE POSTAGE HERE

From your local RCA distributor, headquarters for RCA receiving and power tubes.

RCA HAM TIPS is published by RCA Electronic Components and Devices, Harrison, N.J. It is available free of charge from RCA distributors.

HAM TIPS

A PUBLICATION OF RCA ELECTRONIC COMPONENTS AND DEVICES

VOL. 24, NO. 3 SUMMER, 1964

A Low-Cost High-Efficiency Modulator

By R. K. Lockhart, K2HAK*

RCA Defense Electronic Products

Recent design of a mobile transceiver by the author occasioned the need for a low-cost, high-efficiency modulator.

Since it was planned to have the transceiver operate directly from an auto battery, it was important that both the number of heaters and the amount of heat dissipated within the case be kept at absolute minimums.

K2HAK's modulator employs TV-receiver type power transformer whose high-voltage secondary windings are designed to pass considerable current. Front of modulator shows "Mike Input" and slotted shaft for adjusting "Clamp Bias Level."

The prospect of employing *Heising* (constant-current) modulation was ruled out. This type of modulator does not possess the effectiveness deemed necessary in this instance, nor does it meet the requirement that the carrier be well filled. With an anticipated power of more than 50 watts, the all-important positive envelope peak would be heavily clipped if the audio tube were to be kept within plate dissipation rating. It was apparent also that the output transformer would become a problem as the DC currents of the audio stage and the RF amplifier would be in phase—saturating the core, and becoming additive in terms of IR drop in the transformer.

The answer seemed to lie either in the use of two tubes as a push-pull modulator or in utilization of screen modulation. The first choice, however, violated the filament and heat requirement, while its alternative did not offer the RF output of plate modulation. (Plate modulation provides nearly four times the peak-envelope power for a given carrier power.) Some deliberation on the subject yielded the circuit described in the text that follows. In this discussion, the over-all arrangement in its simplest form is treated first. Following this, the article describes two modifications, and the advantages of each.

Principal Features

Figure 1 serves to highlight several main features of the circuit.

---

*Manager, Advanced Digital Techniques, Applied Research Department, Camden, N. J.

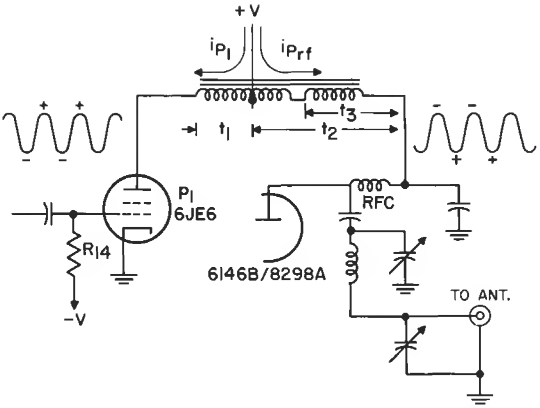

Figure 1: Autotransformer connections showing details of step-up configuration.

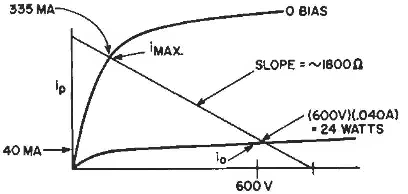

Figure 2: Modulator plate load characteristic.

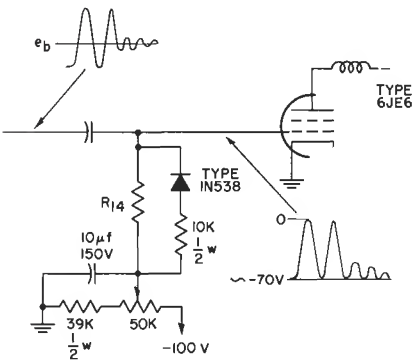

Figure 5: Insertion and operation of clamp diode.

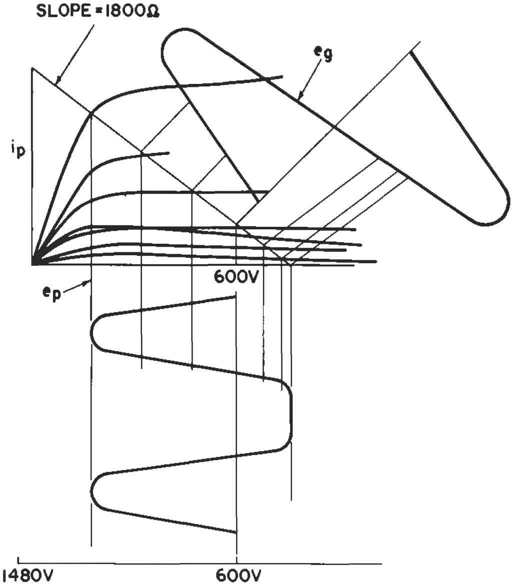

Figure 3: Modulator transfer characteristic.

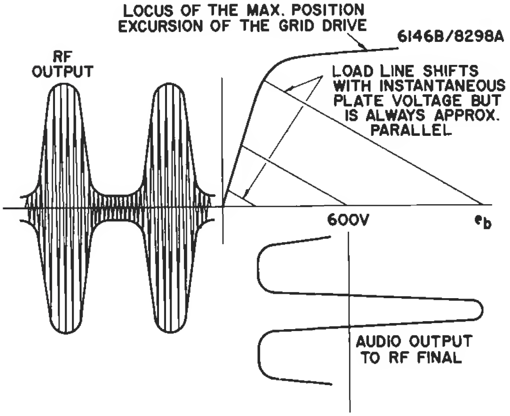

Figure 4: Representation of resulting plate modulation.

The DC plate current of the audio output tube flows in the opposite direction with respect to that of the RF amplifier in the modulation transformer. Consequently, the saturation components tend to buck each other in the core. Since the DC currents do not flow through a common winding, the IR drop of the modulator current does not subtract from the voltage supplied to the RF stage; and as the power loss in the transformer is proportional to I^2, this loss is also reduced.

Because the phase of the audio signal is inverted in going to the RF final, the side of the speech waveform suffering clipping is on the downward side, envelope-wise, and the peak of the envelope is undistorted. As this clipping is appreciable, the turns-ratio, t_2/t_1, can be increased to the point where the clipped downswing approaches zero-carrier and a degree of super-modulation may be achieved. In actual practice, the author has been able to measure modulation upswing as high as 140% while holding downswing to about 95%.

This method of clipping produces high-level speech-limiting which provides good weak-signal readability without splatter.

Because of the inherently high power sensitivity of the RCA-6JE6 novar-type beam-power tube (i.e., g_m of about 12,000), a good plate modulator may be designed requiring only this tube and the RCA-12AX7A high-mu twin triode for full plate modulation of transmitters such as Heath's *Cheyenne*, or various rigs designed for novice use.

A TV-type power transformer designed for a full-wave rectifier should prove adequate. The author resurrected an old power transformer formerly used in a 7-inch TV set (RCA Model 621). This power transformer has the following characteristics:

- One winding for 117 volts (primary), which is not used
- One winding for 500 volts @ 0.250 ampere, RMS center-tapped
- Two filament windings (i.e., one for 6.3 volts @ 3.5 amperes, and one for 5.0 volts @ 3.0 amperes)

Television-receiver-type transformers are particularly well adapted to this use because their high-voltage secondary windings are designed to pass considerable current.

Circuit Design

In examining circuit design, let us assume that we are employing a *Cheyenne* transmitter which utilizes an RCA-6146B/8298A beam-power tube in the output and is designed for use with a 600-volt power supply. The manufacturer's rating allows 600 volts max. and 180 ma for class C plate modulation (6146B). Since the plate dissipation will be exceeded (under certain conditions) if both max. voltage and current are loaded into the tube simultaneously, we further assume a conservative rating of 600 volts and 150 ma to allow for line-voltage changes. This represents a resistance of:

$$R = E/I \text{ or } 600/0.15 \text{ or } 4{,}000 \text{ ohms}$$

This resistance is reflected into the modulator transformer. The turns-ratio of the modulation transformer can be expressed by the voltages of the respective windings. If the secondary is wound for about 250 volts rms, the turns-ratio is:

$$n = \frac{250 + 115}{250} = 1.46$$

The impedance ratio, of course, is the square of the turns-ratio (i.e., $[1.46]^2$ or 2.15). Since the autotransformer is connected "step-up," the reflected impedance on the audio output is:

$$Z = 4{,}000/2.15 \text{ or about } 1{,}800 \text{ ohms}$$

The next step is to draw the load line on the plate "family-of-curves" for the RCA-6JE6, as represented in the simplified sketch in Figure 2. The operating point is determined by the plate dissipation and the grid bias is adjusted until that point is met. The plate dissipation of the 6JE6 is listed at 24 watts—represented by 40 ma—for which current the bias is adjusted with no audio signal. The power output for the undistorted swing is calculated as follows:

Figure 6: Complete schematic diagram and parts list of K2HAK's low-cost, high-efficiency modulator.

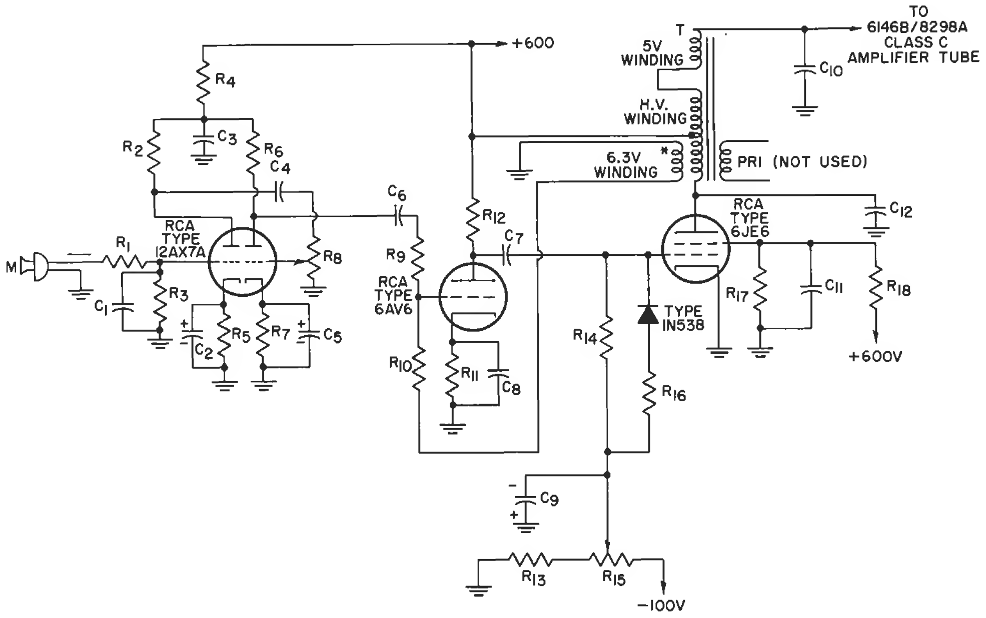

C_1—100 pf ceramic disc, 500 volts
C_2, C_5, C_8—10 µf, 10 volts
C_3—0.22 µf, 600 volts
C_4—0.0033 µf, 600 volts
C_6—0.0047 µf, 600 volts
C_7—0.012 µf, 600 volts
C_9—10 µf, 150 volts
C_{10}, C_{12}—2,200 µf, 2,000 volts
C_{11}—0.47 µf, 400 volts
M—Ceramic microphone, Astatic, Model 150 or equiv.
R_1—47,000 ohms, 0.5 watt
R_2, R_6—0.22 megohm, 0.5 watt
R_3—1 megohm, 0.5 watt
R_4—47,000 ohms, 1 watt
R_5—1,000 ohms, 0.5 watt
R_7—3,900 ohms, 0.5 watt
R_8—0.5 megohm, potentiometer
R_9—0.39 megohm, 0.5 watt
R_{10}, R_{12}—0.15 megohm, 0.5 watt
R_{11}—1,500 ohms, 0.5 watt
R_{13}—39,000 ohms, 0.5 watt
R_{14}—0.18 megohm, 0.5 watt
R_{15}—50,000 ohms, potentiometer
R_{16}—10,000 ohms, 0.5 watt
R_{17}—20,000 ohms, 5 watts
R_{18}—20,000 ohms, 7 watts
T—Thordarson type 26R10 or equiv.

Miscellaneous—Tube sockets: one 9-contact miniature with tube shield; one 7-contact miniature, unshielded; and one novar 9-contact socket.

*If system oscillates, reverse polarity of winding.

$$\hat{i} = (i_{max} - i_0) = 335 - 40 = 295 \text{ ma peak, or } 210 \text{ ma rms}$$

$$P_0 = (210)^2(1800) = 79 \text{ watts}$$

As the power input to the final is 600 volts multiplied by 0.15 ampere, the audio power required for 100% plate modulation is half that amount, or 45 watts. The actual modulation factor obtainable in the upward direction is the square root of the ratio of power available to that required for 100% or:

$$\sqrt{\frac{(79)}{(45)}} \text{ or } 139\%$$

Figure 3 shows how the distortion actually occurs. The bottom scale provides the instantaneous values after inversion occurs in the autotransformer. Figure 4 shows how this signal modulates the RF final.

The first version constructed by the author was intended for use in his own mobile rig. After this, a second unit was built incorporating the modifications described below.

Modifications

The following disadvantages of the original modulator indicate two areas of possible modification or improvement:

- Although the 24 watts represent a small percentage of the total power used by the modulator, this wattage is nevertheless a serious heat producer.
- The negative peak-clipping that permits the high degree of modulation possesses inherent distortion.

The 24 watts may be reduced to as low as two watts by the insertion of a DC-setting type diode across R_{14} (see Figure 5). This allows the bias to be adjusted to produce zero plate current in the absence of audio, thus approaching true class B operation in the sense that the diode sets bias upward.

Insofar as the second disadvantage is concerned, eliminating inherent distortion is no simple matter. On the other hand, satisfactory quality can be obtained without loss of efficiency by adding another voltage amplifier and eliminating the extra gain by inverse feedback (see Figure 6). This second modification was incorporated in a model constructed by the author and compared for performance quality against the modulator (push-pull class B modulator with inverse feedback) incorporated in his regular transmitter. There was little observable difference. (Proper polarity of the feedback winding connection is necessary to maintain a negative value. Reversed polarity may cause the system to oscillate.)

The complete circuit schematic appears in Figure 6, together with the associated parts list. Through use of this modulation system, the discerning ham can go far toward achieving real economy and efficiency in practical modulators.

From your local
RCA distributor,
headquarters for
RCA receiving
and power tubes.

RCA HAM TIPS
is published by RCA
Electronic Components
and Devices, Harrison,
N. J. It is available
free of charge from
RCA distributors.

HAM TIPS

A PUBLICATION OF RCA ELECTRONIC COMPONENTS AND DEVICES

VOL. 24, NO. 4 ©1964, RADIO CORPORATION OF AMERICA FALL, 1964

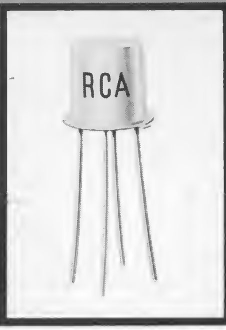

A 144-Mc Antenna-Matching Preamplifier

By L. W. Aurick, K3QAX/W2QEX*

RCA Electronic Components and Devices

Looking for a reliable, economical way to:

—Amplify signals before they're lost in the noise of your antenna system?

—Overcome losses inherent in long feed lines?

—Provide a better match between antenna and feed line?

Here's a new device for radio amateurs which integrates an antenna-matching circuit with a VHF transistor amplifier. The device combines an antenna-matching arrangement, a relay to switch the antenna between receiver and transmitter, and a 2N2708 VHF preamplifier stage. Simplicity in construction and operation insures easy duplication of the unit.

Background

Antenna mismatch and feed-line resistance losses, which are only of academic interest on the amateur high-frequency bands, become very real problems in high-power transmission above 50 megacycles. At these frequencies, even modest antenna-mismatch losses may be unacceptable because of the difficulty encountered in generating the required power as the frequency increases. At high power levels, feed-line resistance losses may be sufficient to cause severe damage to long runs of expensive coaxial cable. While it is true that only the worst conditions impair incoming signals at 50 megacycles, the operator who employs higher frequencies may find weak but otherwise readable signals irretrievably lost in noise. At 144 Mc, efficient transmitter operation at appreciable power levels—as well as the ability of the receiver to distinguish signals from noise—are limited by feed-line resistance (length) and antenna mismatch.

144-Mc Antenna-Matching Preamplifier built by K3QAX/W2QEX employs the RCA-2N2708, a silicon n-p-n double-diffused epitaxial-type planar transistor intended for amplifier, mixer, and oscillator applications up to 500 Mc.

---

*Lancaster, Pennsylvania

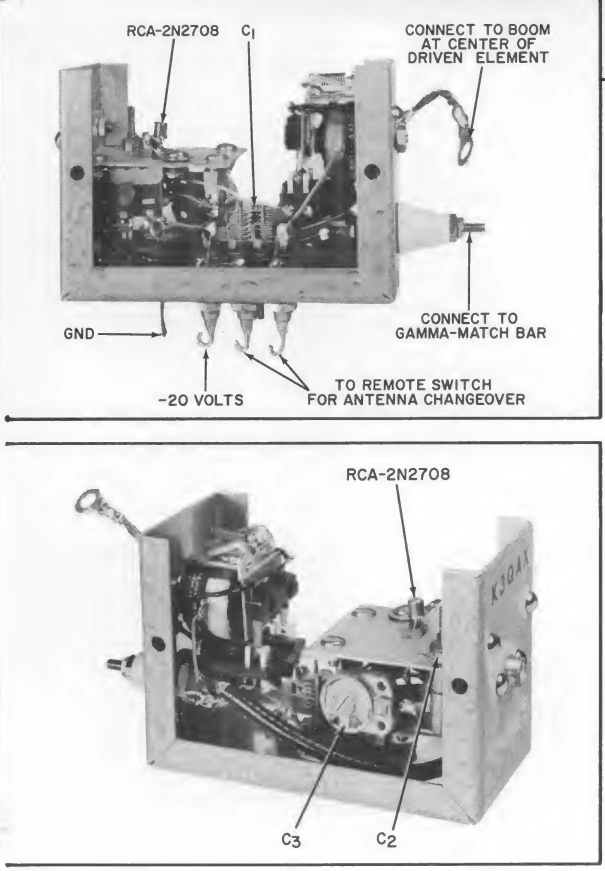

Side views of preamplifier chassis showing locations of unit's principal components.

To most amateurs operating on the VHF bands, antenna matching is no problem. The difficulty arises in coping with the feed-line resistance after the match has been achieved. In the past, there were two alternatives:

(1) A compromise between stronger signals at the antenna with larger feed-line losses (i.e., higher antenna, longer feed lines) and weaker initial signals with lower losses;

(2) Mounting the preamplifier near the antenna to overcome feed-line loss of incoming signals.

The latter method was seldom used, however, because of the problems involved in mounting a conventional tube preamplifier on the antenna. In addition, it was difficult to provide power for switching the antenna between transmitter and receiver, and to supply filament and B+ voltage to the tube and protect it against environmental stresses.

New Solution

The RCA-2N2708 VHF silicon transistor makes available to amateurs the first low-noise, low-cost component sufficiently rugged and reliable for antenna-mounted VHF service.

The antenna-matching preamplifier (see Figure 1) uses the 2N2708 with standard components and an inexpensive relay to provide a minimum gain of 8 db in receiving. The "package" also includes an integral capacitor for use in a gamma-match arrangement that will properly match an antenna for both transmitting and receiving.

It is important that the device be confined to use with transmitters having a maximum input power of 100 watts. Using higher-cost materials (including coaxial relays), however, there is no reason why the principles described could not be applied to similar devices capable of handling higher input powers and higher frequencies. The RCA-2N2708 transistor may be employed at frequencies up to 500 megacycles. RCA's 2N2857, on the other hand, can be used at frequencies up to 1,000 megacycles.

The Amplifier

The 2N2708 amplifier is constructed on an aluminum strip which has a lip for mounting to the wall of the Mini-Box. The aluminum strip measures 1½ inches square with a ½-inch lip, while the Mini-Box measures 4 inches by 2¼ inches by 2¼ inches. In this instance, conventional-size components were used because of their ready availability; however, equivalent miniature items may easily be substituted. In any event, the author followed the customary VHF construction practices of laying out components so they might be connected with the shortest leads possible. No "wire" other than component leads was used in the amplifier construction.

In building the amplifier, the shield lead from the 2N2708 transistor is soldered directly to a ground lug on top of the amplifier chassis. It is recommended that the lead be clamped with a pair of long-nose pliers between the transistor and the ground lug to help dissipate heat away from the transistor. Connections to other leads are made by inserting the 2N2708 into a conventional three-terminal transistor socket. (The builder may find it advantageous to use a Grayhill-type 22-11 four-terminal socket for mounting the 2N2708. The socket terminal mating with the shield lead may then be grounded.)

During reception, the input signal is applied directly to the unneutralized RF amplifier from the gamma-match bar (through reactance-cancelling capacitor, C_1 shown in Figure 1 schematic). During transmission, the relay switches capacitor C_1 from the amplifier to the coaxial feed line and disconnects the output of the amplifier from the feed line. In this manner, the amplifier is isolated from both the antenna and feed line.

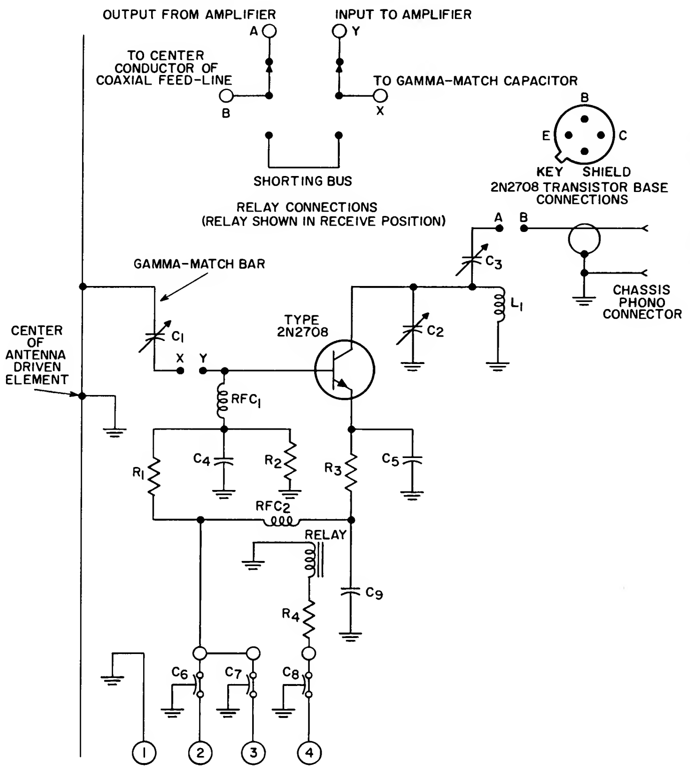

C_1—3.2-50 pf variable (Hammarlund MAPC-50 or equiv.)
C_2—3.0-12 pf, plastic tubular
C_3—3.0-12 pf, ceramic trimmer
C_4, C_5, C_9—470 pf, ceramic disc
C_6, C_7, C_8—500 pf, feedthrough
L_1—2 turns, No. 18, ½-inch
R_1, R_2—10,000 ohms, ¼ watt
R_3—6,200 ohms, ¼ watt
R_4—See text
Relay—KA11DY, 12-volt DC, DPDT (Potter and Brumfield or equiv.)
RFC_1, RFC_2—Ohmite Z-144 or equiv.

Terminal Designations:
(1) GND
(2)—20 volts
(3) and (4) to remote switch on station antenna change-over relay

Figure 1: Schematic diagram and parts list of K3QAX/W2QEX's antenna-matching preamplifier.

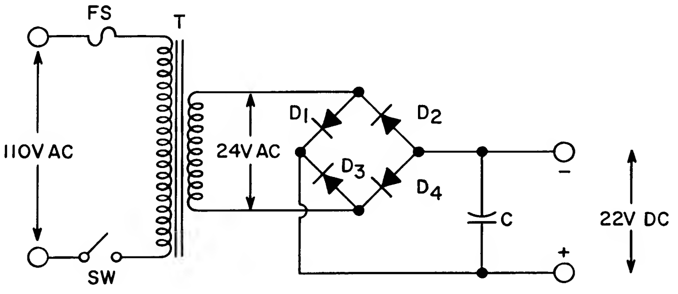

F_s—Fuse, 1 ampere, 110 volts
SW—Switch, AC toggle-type
T—110-volt primary, 24-volt secondary; or two transformers with 110-volt primaries in parallel and 12-volt secondaries in series
D_1, D_2, D_3, D_4—RCA 1N3754 tubular, single-ended type, silicon diffused-junction rectifiers
C—10 μf

Figure 2: Suitable single-phase full-wave bridge power supply for antenna-matching preamplifier.

General Construction and Set-Up

The unit may be mounted on the antenna boom in any convenient manner. Perhaps the easiest method is by merely fastening a small U-bolt to the top of the Mini-Box and connecting a braided ground strap between a lug at the rear of the Mini-Box and a point on the antenna boom directly in line with the gamma-match bar. As the ground strap might be a source of additional inductive reactance that must be cancelled by the capacitor, C_1, it should be kept as short as possible.

Capacitor C_1 is connected to the gamma-match bar through a ceramic feedthrough mounted on back of the Mini-Box. It is insulated against the metal box by a thin sheet of Lucite or similar plastic material which is drilled and mounted so that the capacitor shaft does not touch the sides of the oversize shaft hole in the metal.

The RCA-2N2708 transistor provides good performance and usable gain with applied power from 18 to 20 volts direct current.

RCA HAM TIPS is published by RCA Electronic Components and Devices, Harrison, N.J. It is available free of charge from participating RCA Industrial Distributors. It is also available on a two-year subscription basis ($1 for eight issues to cover costs of handling and mailing). Please make check or money order payable to Radio Corporation of America, and remit to "Radio Corporation of America, Section 882, Harrison, New Jersey."

Within this range, voltage is critical only with respect to reliable operation of the receive-transmit relay. The value of R_4 should be chosen so that the voltage at the relay terminals is 12 volts. When the system is ready for operation and the length of cable has been determined, the voltage available at the point of entry into the amplifier case should be measured. The value of R_4 should be 80 ohms for a voltage of 20 volts, or 60 ohms for a voltage of 18 volts. (If the builder elects to use a 24-volt direct-current relay, R_4 may be eliminated.)

A suitable DC power source for the unit is shown in Figure 2. Alternatively, the required power may be supplied by batteries. A current of approximately 125 milliamperes is required over a DC voltage range of 18 to 20 volts.

Operation

Initial tune-up of the antenna-matching preamplifier involves adjustment of the internal reactance-cancelling capacitor, C_1, and the gamma-match bar, and further requires the use of a VSWR bridge designed to remain in the feed line at all times. When this VSWR bridge has been adjusted for full-scale readings in the "Forward" position, the meter is switched to read "Reflected" power and the length of the gamma-match bar is adjusted for a minimum meter reading. The VSWR at this point might be as high as 2.5 or 3 to 1. C_1 is then adjusted for a ratio of 1 to1 at the desired frequency, which is a perfect match between feed line and antenna. Readjustment of the gamma-match bar and C_1 may be necessary before a perfect match is achieved. The design of the beam antenna, the number of elements, and the spacing between them determine the impedance to be matched and the positions of the gamma-match bar and the capacitor, C_1.

Prior to tuning the transistor amplifier, the builder should employ a grid-dip meter or some other suitable device to assure that the C_2-L_1 combination will tune to the 144-to-148-megacycle band. With the antenna-matching preamplifier mounted to your beam, and with the station receiver tuned to an appropriate test signal, C_3 and C_2 are then tuned for the desired amount of coupling and proper output frequency, respectively. Interaction between C_3 and C_2 makes it necessary to locate—by experimentation—that point at which C_3 produces the desired coupling and C_2 tunes the amplifier output to the desired frequency. Both of these objectives, it should be realized, produce increased signal in the receiver from the test-signal source. As a general rule, C_3 should be near maximum and C_2 near minimum capacitance.

Relatively easy to construct and operate, the 144-Mc Antenna-Matching Preamplifier represents an efficient and inexpensive method for overcoming the effect of long feed lines and properly matching an operator's feed line to his antenna.

RCA

HAM TIPS

A PUBLICATION OF RCA ELECTRONIC COMPONENTS AND DEVICES

VOL. 25, NO. 1 ©1965, RADIO CORPORATION OF AMERICA WINTER, 1964-65

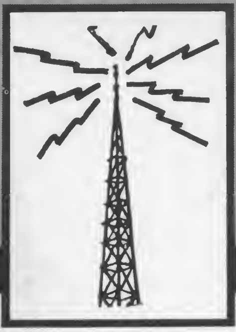

Radio Propagation

And the Amateur Radio Operator

By Howard G. Jones, Jr., W3MBW*

RCA Electronic Components and Devices

In the following article, the author reviews the subject of radio propagation as it applies to the amateur operator. The data should aid the amateur in understanding how his signals reach their destination, whether by skywave or groundwave propagation, and help him to use his frequencies more efficiently, and thereby communicate more effectively.

Long-range transmission in the amateur bands below 30 megacycles is dependent primarily upon the skywave mode of radio-wave propagation. This mode of propagation is made possible by five ionospheric regions, collectively called the *ionosphere,* which are found at distances from 50 to 350 kilometers (about 31 to 217 miles) above the earth. It is important to visualize the structure of the ionosphere to understand more fully the mechanism by which the ham operator's signals reach their destination in the skywave mode. Some knowledge of the response of the ionospheric regions to different frequencies; of their signal-absorption characteristics; and of unusual transmission effects attributed to them is also essential if effective use is to be made of skywave propagation.

Structure of the Ionosphere

The ultraviolet radiation from the sun is believed to supply the energy to ionize the five ionospheric regions. This belief is supported by the significant increase in the ionization levels that occurs during the peak of sunspot activity; it is known that the ultraviolet radiation is maximum during such peaks.

The two ionospheric regions nearest the earth, the D and E layers, exist during the daylight hours only. At the relatively low altitudes of these layers, atmospheric particles recombine so rapidly that a constant source of radiation is required to sustain ionization. The D layer is found from 50 to 90 kilometers above the earth; the E layer, from 90 to 140 kilometers above the earth. Both the height and the ionization level of the layers vary over different parts of the earth and with the season-to-season changes in the zenith angle of the sun. The ionization level also changes with the time of the day and reaches a peak at local noon in any given region of the earth. In the E layer, variations in the ionization level are particularly noticeable, and significant changes can be observed from hour to hour.

In the D layer, because of its lower altitude, atmospheric particles are more abundant, and there is a resultant higher incidence of particle collisions. The signal absorption by this layer is, therefore, greater than that by any of the other atmospheric layers. Particle collisions are also relatively frequent in the E layer, and

---

*Television Picture Tube Division, Lancaster, Pennsylvania

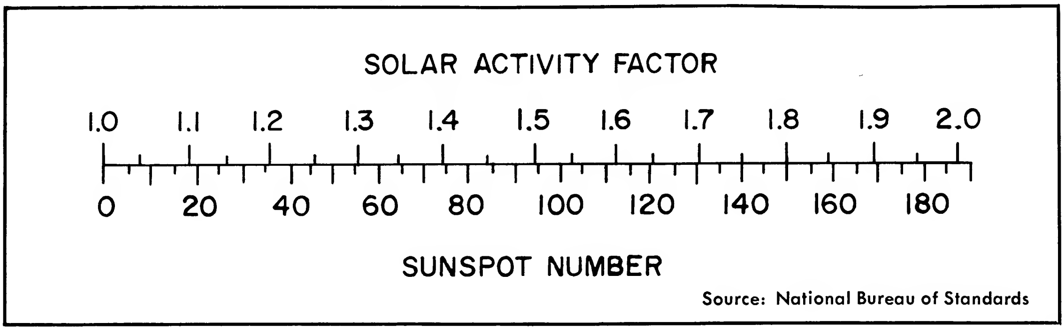

Source: National Bureau of Standards

Figure 1(a): Solar-activity factor.

it too exhibits a comparatively high degree of signal absorption. The E layer, however, reflects zero-incidence radio waves (those directed straight up) far more consistently than does the D layer and is much more useful for communications.

The E_s (or sporadic E) layer is the most unusual and unpredictable of the ionospheric layers. This layer, which can be found at any hour of the day or night in all latitudes, is best visualized as intermittent clouds of ionized particles slightly above the E layer in which the ionization level may change radically from hour to hour. The source of ionization of the E_s layer is still somewhat a mystery. According to some hypotheses, the layer is ionized by particle radiation from the sun, rather than by ultraviolet radiation; other hypotheses suggest that the layer is formed by ionized particles trapped in the earth's magnetic field.

In general, the appearance or disappearance of the E_s layer is unpredictable, although in northern latitudes the existence of the layer has been found to be very closely related to the presence of the aurora. Although its effects are unpredictable, the late-evening "short-skips" are often attributed to it, and the E_s layer is very useful for radio communications.

The uppermost regions of the ionosphere are the most useful for long-range radio-wave transmission. During the daylight hours, these regions are divided into two separate layers: the F_1 layer at heights of 140 to 250 kilometers and the F_2 layer at heights of 200 to 350 kilometers. At night, these layers merge to form a single F layer that ranges from 140 to 250 kilometers above the earth. As in all the ionospheric regions, the ionization levels in the F layers follow the sun. The ionization reaches a peak just after local noon and declines slowly until sunrise. Because the atmosphere is thin at the altitudes of the F layers, particle collisions (and recombinations) are relatively infrequent; thus, the ionization of these layers can be sustained throughout the night. Because of the lower collision rate, there is also less absorption as electromagnetic energy is reflected from the F region.

Seasonal Correction Factors

	Both Terminals		One Terminal N. Lat and
Month	N. Lat	S. Lat	Other S. Lat
Jan	0.9	0.7	0.8
Feb	0.9	0.7	0.8
Mar	0.8	0.8	0.8
Apr	0.8	0.8	0.8
May	0.7	0.9	0.8
Jun	0.7	0.9	0.8
Jul	0.7	0.9	0.8
Aug	0.7	0.9	0.8
Sep	0.8	0.8	0.8
Oct	0.8	0.8	0.8
Nov	0.9	0.7	0.8
Dec	0.9	0.7	0.8

Figure 1(b): Seasonal-correction factors.

Figure 1: Typical solar-activity and seasonal-correction factors. The solar-activity factor (a) must be multiplied by the seasonal-correction factor (b) and the time-of-day factor (see Figure 2) to obtain the absorption-factor K.

Critical Frequency

The ability of any of the ionospheric layers to reflect radio waves depends not only upon the degree of ionization of the layer, but also upon the frequency of the radio waves. In measurements to determine the structure and ionization level of the ionospheric layers, zero-incidence radio waves are often used. In order for any of the ionospheric layers to reflect a radio wave at zero incidence, the frequency of the wave must be below a critical value. This *critical frequency* is that frequency for which

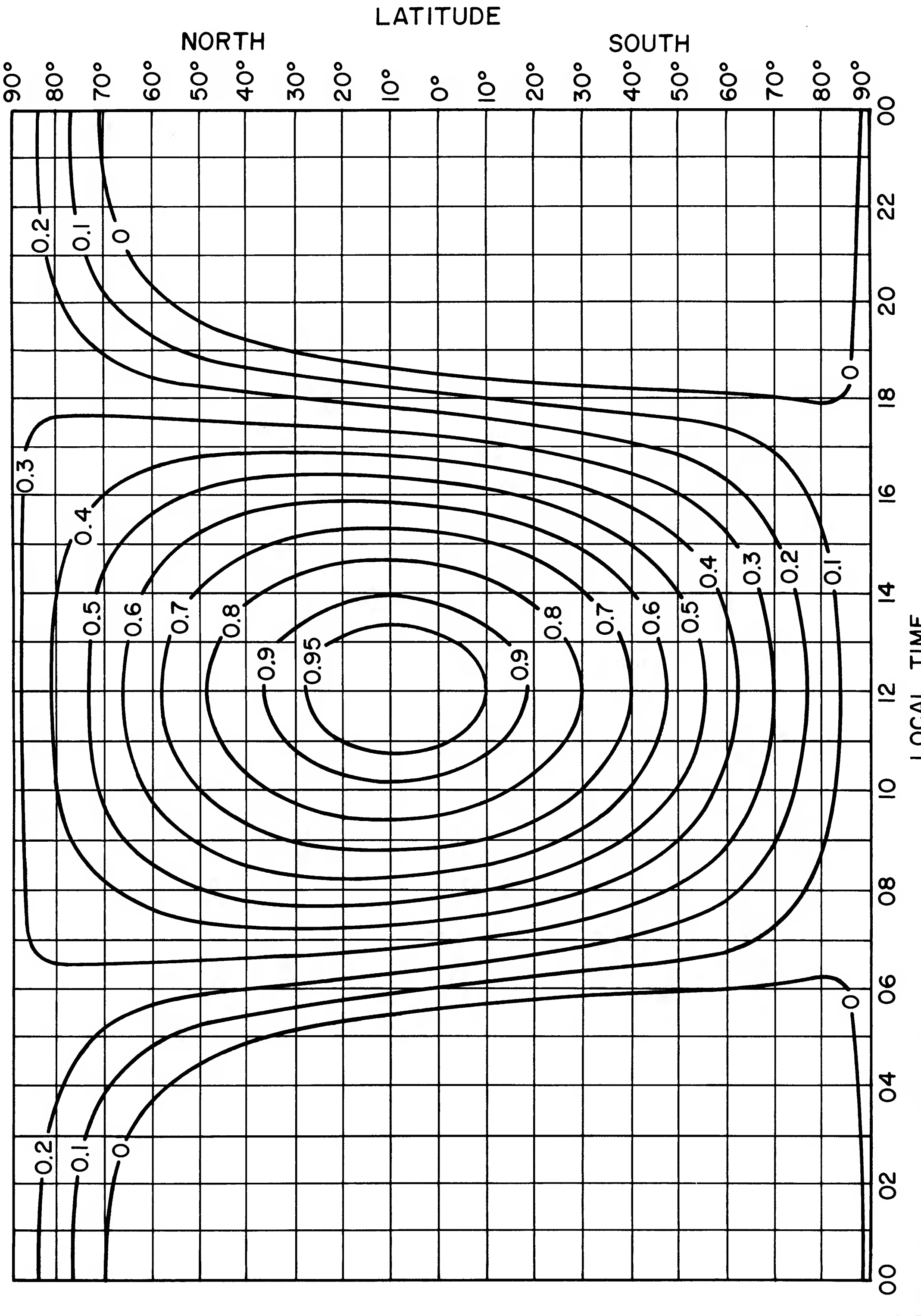

Source: National Bureau of Standards

Figure 2: The chart for the month of April from which the time-of-day factor is obtained. The latter, in turn, is used to determine the absorption-factor K.

50% of the radio waves will penetrate the layer and 50% will be reflected.

The signals reflected to the earth become weaker as frequencies of zero-incidence radio waves deviate from the critical frequency in either direction. Below the critical frequency, a gradual decline occurs because of increased layer absorption. Above the critical frequency, the decline is much more rapid. With but a small increase, the radio wave will not be reflected at all, but instead will penetrate the layer.

The critical frequency is different for each layer and, in general, increases with the height of the layer. For example, the critical frequency of the F layer is usually higher than that of the E layer. If the frequency of a radio wave exceeds the critical frequency of the E layer, it is therefore possible that the wave will pass through the E layer but will be reflected by the F layer. As the wave passes through the E layer, however, it will be attenuated to some extent.

Maximum-Usable and Optimum-Traffic Frequencies

Closely related to the critical frequency is the *maximum usable frequency* (MUF). The MUF is essentially a measure of the ability of an ionospheric layer to reflect radio waves from one point to another. For any given path, it is the frequency at which 50% of the signal will be reflected and 50% will pass through the layer. Thus, for a zero-incidence wave, the MUF is equal to the critical frequency. For other paths, the MUF will vary with the angle of incidence.

Each month, the National Bureau of Standards predicts the MUF for the E and F_2 layers.[1] Average values for the month are given for zero-incidence waves and for waves reflected between two points 4,000 miles apart. If these two values are known, the operator can interpolate to find the MUF for any communications path in the world. The *frequency optimum for traffic* (FOT) is 85% of the MUF. For a radio wave having a frequency equal to the FOT, 90% of the signal will be reflected and only 10% will pass through the layer.

Path Absorption

As a radio wave is propagated by an ionized layer, some of the energy in the wave will be dissipated in the layer. This dissipation, called *path absorption*, is directly proportional to an absorption factor, K, which is given by the following equation:

$$K = T \times M \times S$$

where T is a time-of-day correction factor, M corrects for seasonal variations in the ionization level of the layer, and S is the solar activity correction factor based on the current sunspot number. These factors can be determined from tables and charts prepared monthly by the National Bureau of Standards.[1] Typical tables of the solar activity factor and corresponding sunspot number and of the seasonal correction factor for both

---

[1] CRPL-D Basic Radio Propagation Predictions; $0.10 each or $1.50 per year; Superintendent of Documents, U.S. Government Printing Office, Washington (25), D. C.

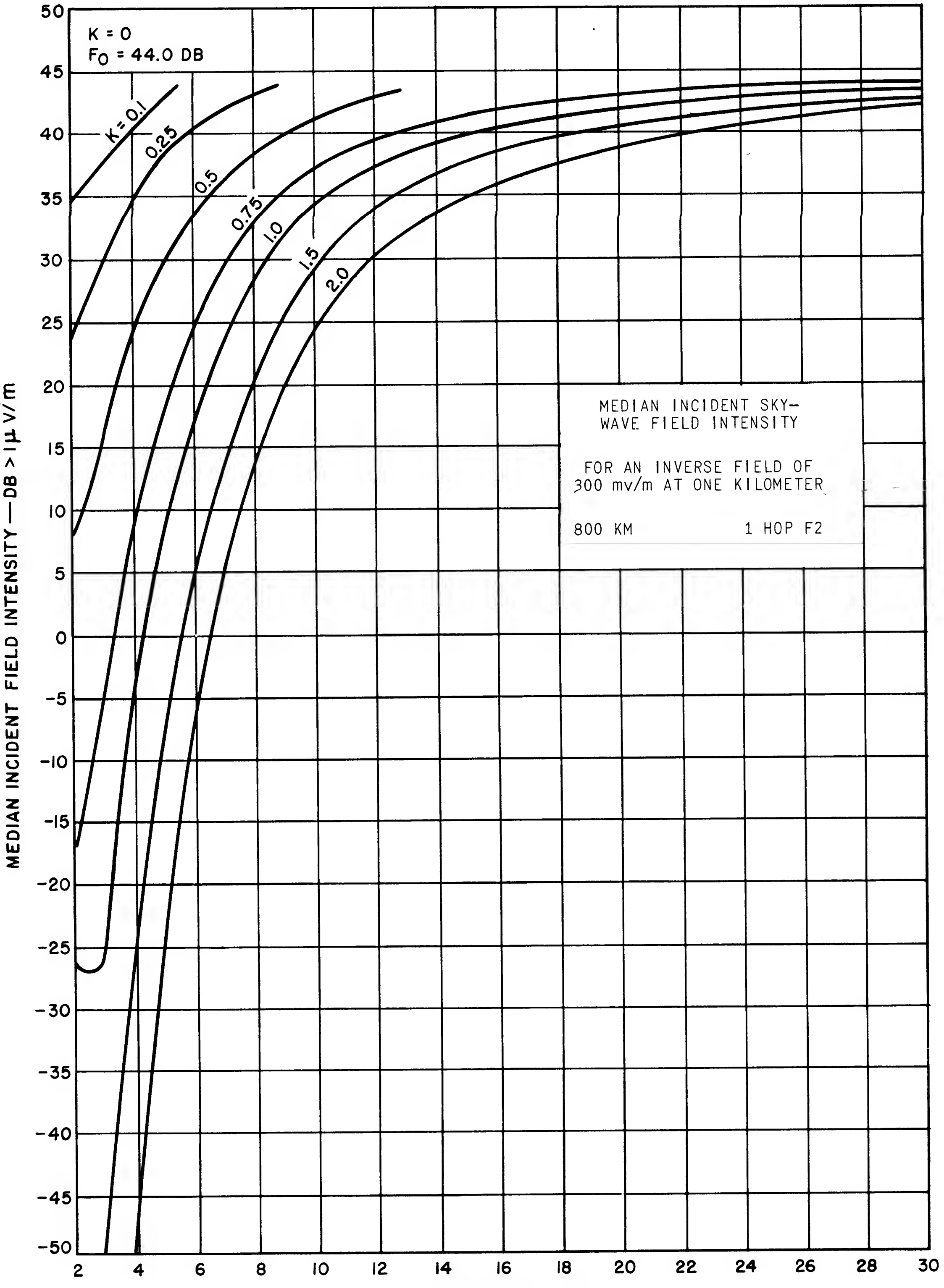

Source: National Bureau of Standards

Figure 3: A typical field-intensity graph for incident skywaves. The appropriate absorption-factor K is used to predict the received field strength in μv/meter (microvolts excited per meter of antenna length). The curves show the variations in received field strength for a kilowatt of RF power radiated from a dipole antenna. Corrections are required for different power outputs and antenna gains.

north and south latitudes are shown in Figure 1. A graph such as that shown in Figure 2 is used to determine the time-of-day factor.

If the absorption factor K is properly applied to a "received field strength" graph and the characteristics of the antennas used at the transmitting and receiving stations are taken into account, the ham operator can accurately predict the signal strength that will be received for a radio wave reflected from the ionosphere. Figure 3 shows a typical field-intensity graph for an incident skywave. The effect of different absorption-factor values is also shown.

Propagation Characteristics Of the Ionospheric Layers

The D-layer will sometimes reflect radio waves from one point to another; however, reflections at zero incidence are rare. The D-layer path is "lossy," because of the high recombination rates, and, except for short-distance transmissions, is not very useful for radio communications.

The E layer is usable at frequencies higher than the D layer; however, there is some attenuation of the signals as they pass through the D layer both up and down. Because the D layer has higher recombination rates than the E layer, there are usually a few hours each day when the E layer may be used without the D layer presenting serious attenuation problems. These hours occur at sunrise before the D layer ionizes fully and at sunset after it has lost some of its ionization.

The E_s layer exhibits characteristics similar to those of the E layer, except for the sporadic nature of its appearance and disappearance.

The F_1 and F_2 layers are the "work horses" of communications. These layers are useful both day and night; however, daytime operation is usually "lossy," because of the presence of the D and E layers. At night, long-distance-communication paths are possible with very little loss and good dependability.

Various Modes of Radio-Wave Propagation

When an electromagnetic wave is radiated from an antenna, it is generally considered to have the potential for two kinds of communications: groundwave and skywave. Either or both methods may account for successful communications. In some instances, however, a skywave skip is impossible because of the MUF or the time of day.

Groundwave propagation is very dependent upon the type of path over which the signal travels. For convenience, the paths are classified poor, good, and seawater paths, based upon the relative conductivity of the intervening earth. Figure 4 shows typical groundwave field-intensity curves for radiation over "good-earth" paths. There are several generalizations that may be made concerning groundwave transmissions. They are usually limited to electrical line of sight. It therefore stands to reason that an increase in groundwave range may be realized by an increase in the antenna height. In some cases, however, an increase in power is required as well. The sensitivity of the receiver may well be another consideration.

Groundwave propagation is subject to a phenomenon called *shadow loss* caused by the inability of electromagnetic waves to bend around mountains or buildings. In groundwave work it is important to consider the natural and/or man-made obstacles that may introduce shadow loss over any given path.

Aside from the two principal means of propagation (groundwave and skywave), there are a few unusual methods, such as the ones described below:

In the northern latitudes, the aurora have unusual effects on the propagation of radio waves. At the lower frequencies (those below 30 megacycles), the aurora attenuate the signals severely, and this attenuation must be added to that for normal skywave reflection. In the peak auroral-attenuation regions, the auroral-attenuation factor may be as much as 5 orders of magnitude greater than the normal propagational-loss factor K.

The auroras that cause signal drop-out below 30 megacycles are often suitable means of propagation above 30 megacycles. The signals propagated, however, are usually unreadable unless continuous-wave transmission is used, because there is a tendency towards rapid fading and "flutter." Best results are usually obtained by aiming the beam at the auroral display, regardless of the location being received.

As meteors pass through the upper atmosphere, they leave a trail of highly ionized air behind them, which can propagate VHF signals. This technique is virtually useless except perhaps during a meteor shower. Straight CW must be used, because these signals "whistle" and "warble" quite badly.

A technique used more and more by com-

---

[2] Circular Number 462; Ionospheric Radio Propagation; $1.25; Superintendent of Documents, U.S. Government Printing Office, Washington (25), D. C.

mercial radio links is *troposcatter.* A tendency for radio waves to scatter in the atmosphere is noticeable in the VHF region, but it is most effective and most widely used in the UHF bands. The mechanism of troposcatter allows communications beyond line of sight, with stable signals. The implementation of troposcatter links is complex, however, and requires the use of high-power transmitters and of high-gain antennas.

Tropospheric propagation in the VHF region is principally by means of *tropospheric bending.* At the boundary of air masses of different temperatures and humidities, the refractive index is different from that of either mass. It is therefore possible to communicate along a path (far exceeding line of sight) which falls along this refractive boundary. Signals are sometimes "tunneled" along such boundaries for hundreds of miles.

Recommendations

More effective communications by the ham operator is made possible by the use of the predicted propagation conditions as a guide for scheduling. The author cannot recommend too highly the propagation information offered by the National Bureau of Standards.[1,2] The predictions are based upon experimental data taken at several of the National Bureau of Standards' laboratory sites, and upon the knowledge of the effects of certain cyclic phenomena (sunspots, for example). This information is published three months in advance, and it enables the operator to predict the times, bands, and paths open to him. Or, he may ascertain what time or band would be best to arrange a scheduled contact with another ham. After all, propagation is the basis of all radio communications, both commercial and amateur.

Figure 4: Typical groundwave field-intensity curves for 1 kilowatt of RF power radiated from a short vertical antenna at ground level. (A "good-earth" intervening path is assumed.)

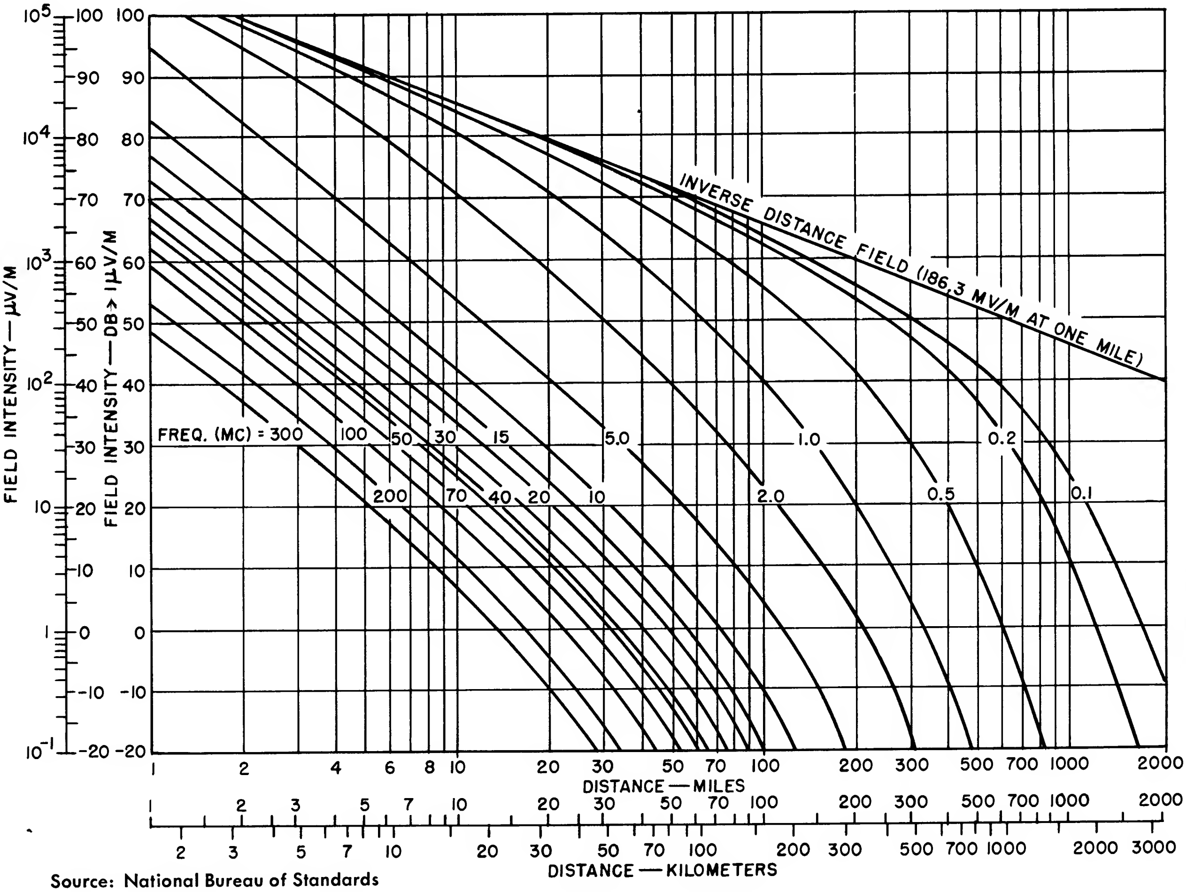

Source: National Bureau of Standards

CREATED BY THE HAND OF EXPERIENCE

NEW LOOK IN RCA POWER TUBES FOR UHF!

All have one-piece, precision aligned grids and use coaxial-electrode design

Benefits:
higher efficiency at UHF,
rugged construction
for any kind of operation

Here they are—the latest RCA power tubes for modern transmitters. In a compact chassis they'll QRO for you with less driving power than many conventional types working on the lower bands. And, if you want to operate mobile, these tubes will deliver rated power over quite a wide swing in battery voltage.

High-perveance design enables you to get the power you want at UHF with lower plate voltages. Metal-ceramic construction provides remarkable cooling capabilities. Tube life is outstanding.

Why not let your RCA Industrial Tube Distributor bring you up to date on these and other power tube developments with a copy of the new PWR-506A Product Guide for RCA Power Tubes. Or, for additional technical information write: Commercial Engineering, RCA Electronic Components and Devices, Harrison, N.J.

TYPICAL OPERATION
Class C Telegraphy or RF Telephony Service

Type	Cooling	Maximum Plate Dissipation (watts)	Plate Voltage (volts)	Frequency (Mc)	Useful Power Output (watts)
8072	Conduction	100*	700	50 175 470	110 105 85
8121	Forced-air	150	1500	50 470	275 235
8122	Forced-air	400	2000	50 470	375 300
8462 (Quick-heating)	Conduction	100*	700	50 175 470	110 105 85

*May be higher, depending on heat-sink design

RCA® The Most Trusted Name in Electronics

Information furnished by the Radio Corporation of America is believed to be accurate and reliable. However, no responsibility is assumed by RCA for its use; nor for any infringements of patents or other rights of third parties which may result from its use. No license is granted by implication or otherwise under any patent or patent rights of RCA.

RCA HAM TIPS is published by RCA Electronic Components and Devices, Harrison, N.J. It is available free of charge from participating RCA Industrial Distributors. It is also available on a two-year subscription basis ($1 for eight issues to cover costs of handling and mailing). Please make check or money order payable to Radio Corporation of America, and remit to "Radio Corporation of America, Section 882, Harrison, New Jersey."

DISTRIBUTED BY
GEORGE D. BARBEY CO.. INC.
READING LEBANON
LANCASTER POTTSTOWN

'N'T TOP BERKS COUNTY

BLK. RT.
AD'L. 3/8¢ PD.

WHEN MAILING
PLACE POSTAGE HERE

READING PA.
U.S. POSTAGE
02 ½
PB METER 314629

HAM TIPS

A PUBLICATION OF RCA ELECTRONIC COMPONENTS AND DEVICES

VOL. 25, NO. 2 ©1965, RADIO CORPORATION OF AMERICA SPRING, 1965

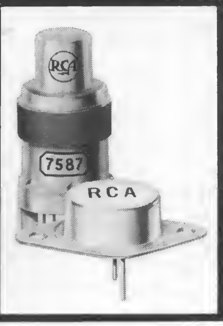

Transistors and Nuvistors In a Two-Meter Transceiver

By R. M. Mendelson, W2OKO*
RCA Electronic Components and Devices

Part I

Dramatic strides in electronics attending the introduction and full growth of the transistor have been accompanied by far-reaching effects in the field of ham equipment, where — almost daily — radio amateurs are being advised of new, ingenious designs proclaiming the versatility, compactness, and high quality of advanced solid-state gear.

In a two-part article commencing with this issue and ending in the Summer, 1965, issue of HAM TIPS, W2OKO offers readers a novel departure from the more conventional, transistorized apparatus — a two-meter transceiver that utilizes both transistors and RCA nuvistors to achieve an effective compromise in all-around economy and operating efficiency.

Constructed more than seven months ago, this unique rig already has been used by the author in hundreds of successful QSO's at ranges up to, and exceeding, 100 miles.

Figure 1: W2OKO's two-meter transceiver features large dial with vernier for easy tuning. All operating controls of the unit are located on the front panel.

---

*Commercial Receiving Tube and Semiconductor Division, Somerville, New Jersey

Although a sufficient number of high-frequency transistor types are available to construct an all-transistor transceiver, the high cost of these types makes their use impractical — if not prohibitive. An investigation of RCA nuvistors by the author showed these tiny metal-ceramic tubes to be far more economical — even after due consideration of the high-voltage supply they require. As a result, nuvistors were employed in both the receiver and transmitter sections of the unit.

The block diagram and schematic drawing (Figures 2 and 3, respectively) reveal in detail the several features that are incorporated in the design of the transceiver. In addition to this, of course, a versatile power transformer is required to permit operation from either a 12-volt automobile or 117-volt residential source. Transformers meeting such requirements are readily available, and can serve very well in operating either directly from line voltage or from a 12-volt-DC source as part of a DC-to-DC converter. The proper circuitry is automatically chosen by the power plug that is used.

If a reasonably good antenna is employed, the transmitter power level is more than adequate for mobile operation, local net contacts, and field-day work.

Basic Design Concepts

The 144-Mc receiver front-end is a well-proven unit previously described in Ham Tips.[1]

The first intermediate frequency selected was 11.7 megacycles. This is sufficiently high to give good front-end image rejection and allow use of commercial transformers. It is also possible to broad-tune this stage for a 4-megacycle bandwidth from 9.7 Mc to 13.7 Mc.

Because the bandwidth of the first IF stage is broad enough to afford coverage of the entire 2-meter band, the front-end of the receiver is fixed-tuned. As a result, no tracking problems exist. Station selection is accomplished by tuning the second-converter variable-frequency oscillator.

The second intermediate frequency selected was one megacycle. Consequently, when the oscillator is set one megacycle above the 9.7-Mc signal (144 Mc), it is also possible to convert the signal at 11.7 Mc (146 Mc) down to one megacycle. In this way, use is made of the customarily rejected image to provide simultaneous reception of 144-146 megacycles and 146-148 megacycles. On most bands, this arrangement would be chaotic. On two meters, however, where most of the stations operate below 146 megacycles, it provides a simple way of tuning the entire band without tracking problems.

The transistor oscillator and buffer are ex-

(Continued on page 6)

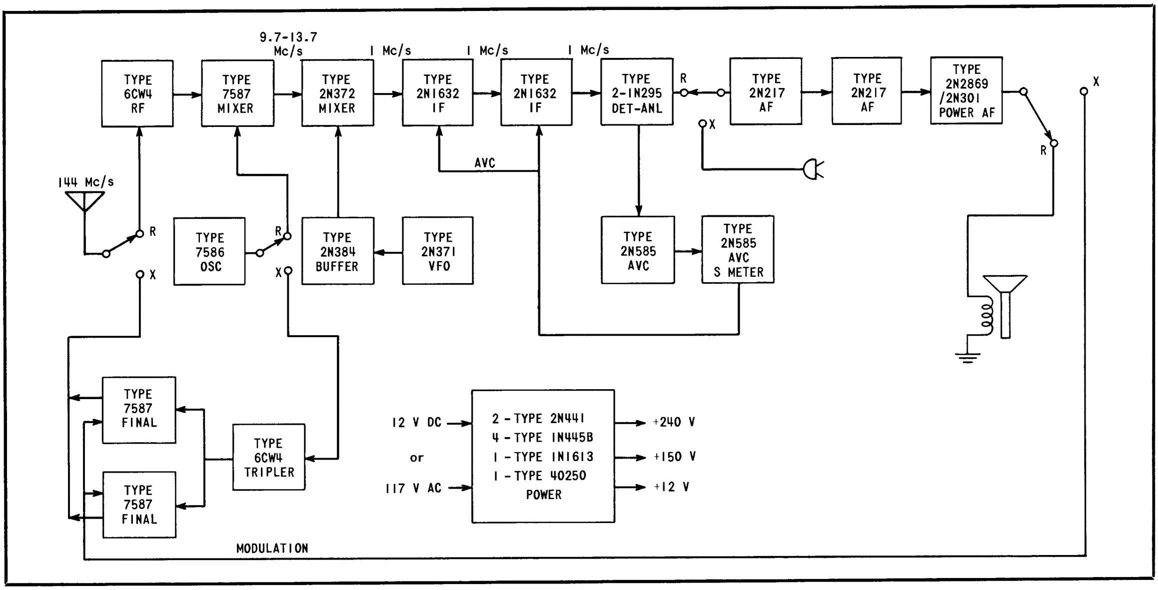

Figure 2: Block diagram of W2OKO's two-meter transceiver shows all RCA nuvistor and transistor types employed in the unit, together with their individual circuit assignments.

---

[1] Mendelson, R. M., "Nuvistor Two-Meter Converter," Ham Tips, Volume 21, No. 2, May, 1961.

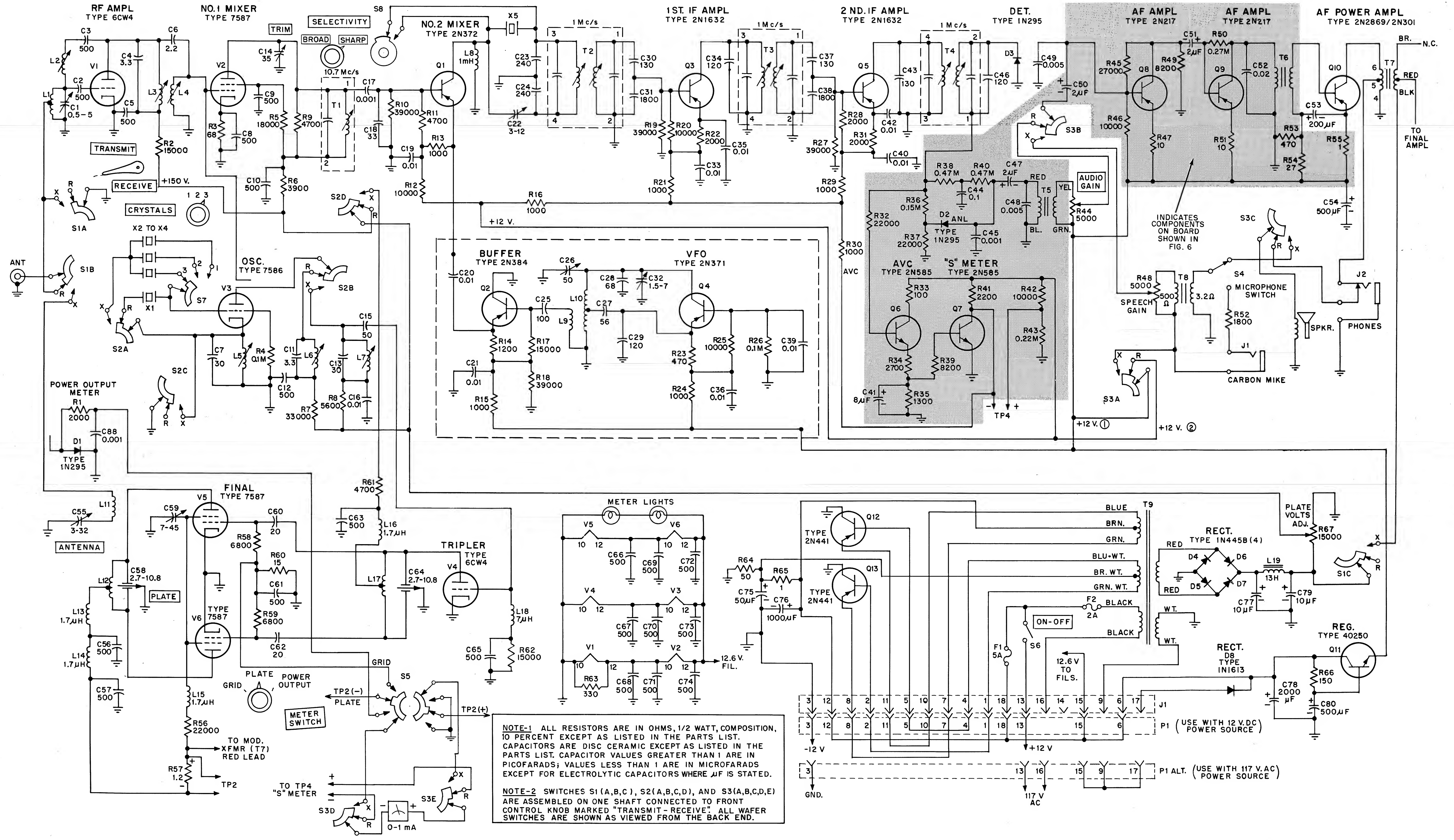

NOTE-1 ALL RESISTORS ARE IN OHMS, 1/2 WATT, COMPOSITION, 10 PERCENT EXCEPT AS LISTED IN THE PARTS LIST. CAPACITORS ARE DISC CERAMIC EXCEPT AS LISTED IN THE PARTS LIST. CAPACITOR VALUES GREATER THAN 1 ARE IN PICOFARADS; VALUES LESS THAN 1 ARE IN MICROFARADS EXCEPT FOR ELECTROLYTIC CAPACITORS WHERE µF IS STATED.

NOTE-2 SWITCHES S1 (A,B,C), S2 (A,B,C,D), AND S3 (A,B,C,D,E) ARE ASSEMBLED ON ONE SHAFT CONNECTED TO FRONT CONTROL KNOB MARKED "TRANSMIT-RECEIVE". ALL WAFER SWITCHES ARE SHOWN AS VIEWED FROM THE BACK END.

C_1—0.5 to 5.0 pf tubul (Erie 532A or equiv.)
C_4, C_{11}—3.3 pf ceram Centralab TCZ 3R3 or
C_5, C_8, C_9, C_{10}—500 pf ton (Erie 662-003-501
C_6—2.2 pf ceramic tu tralab TCZ-2R2 or equ
C_{13}—30 pf tubular cer tralab TCZ-30 or equ
C_{14}—35 pf air variable lund HF35 or equiv.)
C_{15}—50 pf tubular cer tralab TCZ-50 or equi
C_{22}—3 to 12 pf ceram (Erie 557-17R or equi
C_{24}, C_{25}—240 pf silve menco DM10-241 or e
C_{26}—50 pf air tuning (Hammarlund MC-50S
C_{27}—56 pf silver mic DM10-560 or equiv.)
C_{28}—68 pf silver mic DM10-689 or equiv.)
C_{29}, C_{34}, C_{46}—120 pf (Elmenco DM10-121 c
C_{30}, C_{37}, C_{43}—130 pf (Elmenco DM10-131 c
C_{32}—1.5-7.0 pf ceram NPO (Erie 503-10R or
C_{41}—8 µf electrolytic (Sprague TE-1149 or e
C_{44}—0.1 µf paper (Aer V161 or equiv.)
C_{47}, C_{50}, C_{51}—2 µf ele volt (Sprague TE-114
C_{53}—200 µf electroly (Sprague TE-1064 or
C_{55}—3 to 32 pf air capa son 160-130 or equiv
C_{58}, C_{64}—2.7 to 10.8 air capacitor (Johnso or equiv.)
C_{59}—7 to 45 pf ceram (Erie 503-33R or equi
C_{60}, C_{62}—20 pf ceran (Centralab TCZ-20 or
C_{75}—50 µf electrolyti (Sprague TE-1160 or
C_{76}—1,000 µf electroly (Cornell BR-2000-15 o
C_{77}, C_{79}—10 µf, 450 v FP234 Dual or equiv.)
C_{78}—2,000 µf electroly (Cornell BR-2000-15 o
C_{80}—500 µf electrolyt (Cornell BR-500-15 or
L_1—5 turns, No. 16 ba inch (spaced wire) di 2 turns up from bott
L_2—12 turns, No. 26 wire on ¼-inch-dia form (Miller No. 43 or equiv.)

(P

Figure 3: S W2OKO's t

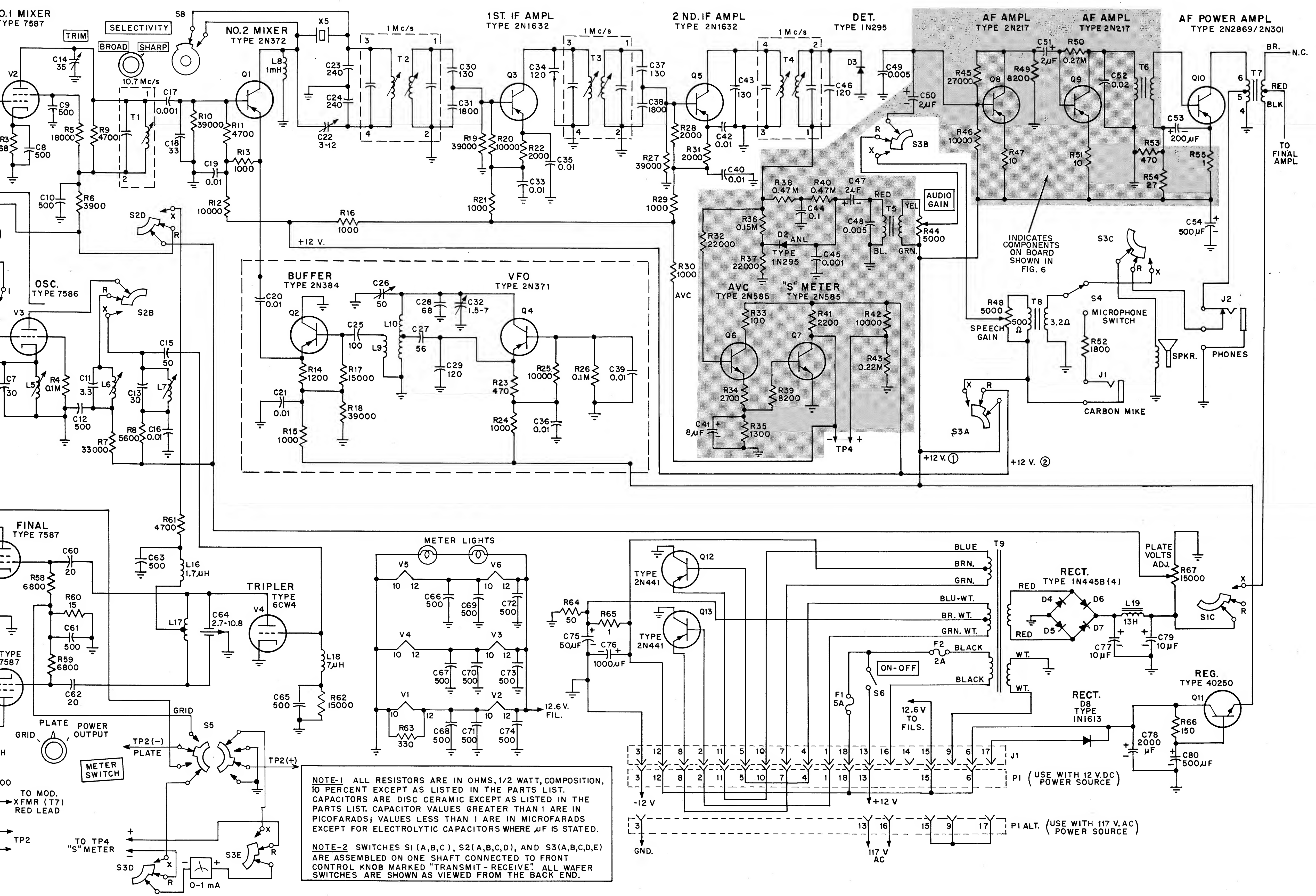

NOTE-1 ALL RESISTORS ARE IN OHMS, 1/2 WATT, COMPOSITION, 10 PERCENT EXCEPT AS LISTED IN THE PARTS LIST. CAPACITORS ARE DISC CERAMIC EXCEPT AS LISTED IN THE PARTS LIST. CAPACITOR VALUES GREATER THAN 1 ARE IN PICOFARADS; VALUES LESS THAN 1 ARE IN MICROFARADS EXCEPT FOR ELECTROLYTIC CAPACITORS WHERE µF IS STATED.

NOTE-2 SWITCHES S1 (A,B,C), S2 (A,B,C,D), AND S3 (A,B,C,D,E) ARE ASSEMBLED ON ONE SHAFT CONNECTED TO FRONT CONTROL KNOB MARKED "TRANSMIT-RECEIVE". ALL WAFER SWITCHES ARE SHOWN AS VIEWED FROM THE BACK END.

C_1—0.5 to 5.0 pf tubular trimmer (Erie 532A or equiv.)
C_4, C_{11}—3.3 pf ceramic tubular Centralab TCZ 3R3 or equiv.)
C_5, C_8, C_9, C_{10}—500 pf silver button (Erie 662-003-501J or equiv.)
C_6—2.2 pf ceramic tubular (Centralab TCZ-2R2 or equiv.)
C_{13}—30 pf tubular ceramic (Centralab TCZ-30 or equiv.)
C_{14}—35 pf air variable (Hammarlund HF35 or equiv.)
C_{15}—50 pf tubular ceramic (Centralab TCZ-50 or equiv.)
C_{22}—3 to 12 pf ceramic trimmer (Erie 557-17R or equiv.)
C_{24}, C_{25}—240 pf silver mica (Elmenco DM10-241 or equiv.)
C_{26}—50 pf air tuning capacitor (Hammarlund MC-50S or equiv.)
C_{27}—56 pf silver mica (Elmenco DM10-560 or equiv.)
C_{28}—68 pf silver mica (Elmenco DM10-689 or equiv.)
C_{29}, C_{34}, C_{46}—120 pf silver mica (Elmenco DM10-121 or equiv.)
C_{30}, C_{37}, C_{43}—130 pf silver mica (Elmenco DM10-131 or equiv.)
C_{32}—1.5-7.0 pf ceramic trimmer NPO (Erie 503-10R or equiv.)
C_{41}—8 µf electrolytic, 15 volt (Sprague TE-1149 or equiv.)
C_{44}—0.1 µf paper (Aerovax V84C-V161 or equiv.)
C_{47}, C_{50}, C_{51}—2 µf electrolytic 15 volt (Sprague TE-1149 or equiv.)
C_{53}—200 µf electrolytic, 3 volt (Sprague TE-1064 or equiv.)
C_{55}—3 to 32 pf air capacitor (Johnson 160-130 or equiv.)
C_{58}, C_{64}—2.7 to 10.8 pf butterfly air capacitor (Johnson 160-211 or equiv.)
C_{59}—7 to 45 pf ceramic trimmer (Erie 503-33R or equiv.)
C_{60}, C_{62}—20 pf ceramic tubular (Centralab TCZ-20 or equiv.)
C_{75}—50 µf electrolytic, 15 volt (Sprague TE-1160 or equiv.)
C_{76}—1,000 µf electrolytic, 15 volt (Cornell BR-2000-15 or equiv.)
C_{77}, C_{79}—10 µf, 450 volt (Mallory FP234 Dual or equiv.)
C_{78}—2,000 µf electrolytic, 15 volt (Cornell BR-2000-15 or equiv.)
C_{80}—500 µf electrolytic, 15 volt (Cornell BR-500-15 or equiv.)
L_1—5 turns, No. 16 bare wire, ¼-inch (spaced wire) diameter, tap 2 turns up from bottom
L_2—12 turns, No. 26 enamelled wire on ¼-inch-diameter slug form (Miller No. 4300 Ceramic or equiv.)
L_3, L_4—4 turns, No. 26 enamelled wire closewound on ¼-inch-diameter slug form (Miller 40A000-CBI Ceramic or equiv.)
L_5—4 turns, No. 26 enamelled wire closewound on ⅜-inch-diameter phenolic slug form (Miller 21A-000RBI or equiv.)
L_6—5 turns, No. 26 enamelled wire closewound on ¼-inch-diameter slug form (Miller 40A000CBI or equiv.)
L_7—4 turns, No. 26 enamelled wire, ⅜-inch (spaced wire) diameter phenolic slug form (Miller 21A-000RBI or equiv.)
L_8—1 mh (National or equiv.)
L_9—2 turns, air wound ½-inch diameter from same miniductor as L_{10} (B & W 3003 or equiv.)
L_{10}—21 turns, air wound, ½-inch diameter, tap 2 turns up from ground (B & W Miniduct 3003 or equiv.)
L_{11}—1 turn, No. 14 bare wire, ¾-inch diameter and "spaghetti" insulated
L_{12}—5 turns, No. 14 bare wire, ½-inch diameter, ⅝-inch long and tapped at center
L_{13}, L_{14}, L_{15}, L_{16}—1.7 µh choke (Ohmite Z144 or equiv.)
L_{17}—4 turns, No. 16 bare wire, ½-inch diameter ⅝-inch long and tapped at center
L_{18}—7µh choke (Ohmite Z-50 or equiv.)
L_{19}—13h 65 ma choke (Stancor C1708 or equiv.)
Meter—0 to 1.0 ma, with 0-5 and 0-10 scales and "S"-meter scale (Lafayette 99G 2513 or equiv.)
R_2—Composition, 15,000 ohm, 1 watt
R_7—Composition, 33,000 ohm, 1 watt
R_8—Composition, 5,600 ohm, 1 watt
R_{44}, R_{48}—5,000 ohm, carbon potentiometer
R_{53}—Composition, 470 ohm, 1 watt
R_{54}—Composition, 27,000 ohm, 1 watt
R_{55}—1 ohm, 1 watt (Ohmite axial lead 4330 or equiv.)
R_{56}—Composition, 22,000 ohm, 1 watt
R_{57}—Composition (5%), 1.2 ohm, ½ watt
R_{63}—Composition, 330 ohm, 1 watt
R_{64}—50 ohm, 10 watt, wirewound (Ohmite Brown Devil 1718 or equiv.)
R_{65}—1 ohm, 5 watt (Ohmite Axial Lead 4530 or equiv.)

(Parts list continued on page 6)

Figure 3: Schematic diagram and parts list of W2OKO's two-meter transceiver.

(Parts list continued from preceding page)

R_{66}—Composition, 150 ohm, 1 watt

R_{67}—15,000 ohm, slide wire, 25 watt (Ohmite 0387 or equiv.)

S_1—3 pole, 5 position, non-shorting, ceramic (Centralab PA5 Section)

S_2—5 pole, 3 position, non-shorting, ceramic (Centralab PA7 Section)

S_3—5 pole, 3 position, shorting, ceramic (Centralab PA6 Section)

(Note: S_1, S_2, and S_3 joined on same 6-inch shaft assembly—Centralab PA302)

S_4, S_6—SPST Toggle

S_5—2 pole, 3 position, miniature (Grayhill Series 5000 or equiv.)

S_7—1 pole, 3 position (Centralab 1461 or equiv.)

S_8—1 pole, 2 position (Centralab 1460 or equiv.)

T_1—10.7-Mc transformer (use primary only), (Miller 1601 or equiv.)

T_2, T_3, T_4—1.5-Mc transformer (tuned to 1.0 Mc by extra capacitors in circuit), (Miller 13-W1 or equiv.)

T_5—Audio transformer, 20,000 ohms to 800 ohms (Lafayette Argonne AR151 or equiv.)

T_6—Audio transformer, 10,000 ohms to 15 ohms (Lafayette Argonne AR110 or equiv.)

T_7—Audio universal transformer, used in reverse, 8 watt (Stancor A3850 or equiv.)

T_8—Audio transformer, 500 to 3.2 ohms (Lafayette Argonne AR119 or equiv.)

T_9—Power transformer: primaries 12-volt DC or 117-volt AC; secondaries 280-volt DC at 150 ma and 12.6-volt AC at 3 amps (Stancor P8195 or equiv.)

X_1—Crystal, third overtone 44.766 Mc, style FA5 holder for receivers

X_2, X_3, X_4—Crystals for transmitter, 48.0000 to 49.3333 Mc, third overtone, style FA5 holders

X_5—1-Mc fundamental for filter

Miscellaneous—Sockets for nuvistors and transistors; terminal board pre-punched with lugs (see text); chassis 12 inches by 8 inches by 3 inches; cabinet (Bud SB2140); heat sink for 2N2869; speaker (3½-inch diameter, 3.2 ohm); 18-pin male socket (Jones P318SB or equiv.); and two 18-pin female plugs (Jones S318CCT or equiv.)

(Continued from page 2)

tremely stable in this transceiver; the RCA-2N371 was originally designed and tested especially for stable oscillator operation at even higher frequencies. The 2N384 buffer prevents loading of the oscillator.

The six tuned circuits in the IF stages, together with the 1-Mc crystal filter (X_5), provide adequate selectivity. If a high degree of selectivity is not deemed necessary, the builder may omit the crystal unit from the circuit.

A simple, yet important, innovation in the transceiver is the use of the receiver speaker as a microphone in the transmit position. *No longer need the amateur be concerned over the fact that he forgot his microphone at home!* The transceiver, however, also incorporates a jack for a conventional carbon microphone.

Use of the same nuvistor crystal oscillator for receiving and transmitting eliminates the need for a socket and tube. The proper crystal is chosen by the send-receive switch, S_2. Extra crystal sockets and a switch (S_7) are provided to allow a choice of three transmitting frequencies.

Initial operation of the transceiver from AC power lines led to the presence of excessive ripple in the 12 volts supplied to the transistors. The additional filtering capacitance required to eliminate the ripple was subsequently provided by the regulator circuit utilizing transistor, Q_{11}. This circuit acts as a capacitance multiplier and adds approximately 10,000 microfarads of capacitance to the filter circuit.

The multi-scale-type meter is used both for transmitter tuning and for measuring signal strengths. In the transmit position of S_3, the meter can be switched to measure the grid or plate current or the power output from the final amplifier. In the receive position, the meter functions as an "S" meter.

Construction

As in all VHF circuitry, the layout of this transceiver requires proper parts-orientation and short leads. If the general layout shown in Figures 4 and 5 is followed, no trouble should be encountered in either the transmitter or the receiver units. Special care should be taken to make certain that the parts are located so as not to interfere with the send-receive switch mounted on the main chassis.

A good solder joint between the nuvistor sockets and the brass plate will ensure solid grounding of the nuvistor shell to provide noise-and-oscillation-free operation.

The author took full advantage of the small size and low-voltage requirements of transistors by mounting all audio circuits — except the power amplifier — on a phenolic board, thus utilizing space under the chassis that otherwise might have been wasted. Detailed in Figure 6, this terminal board was hand

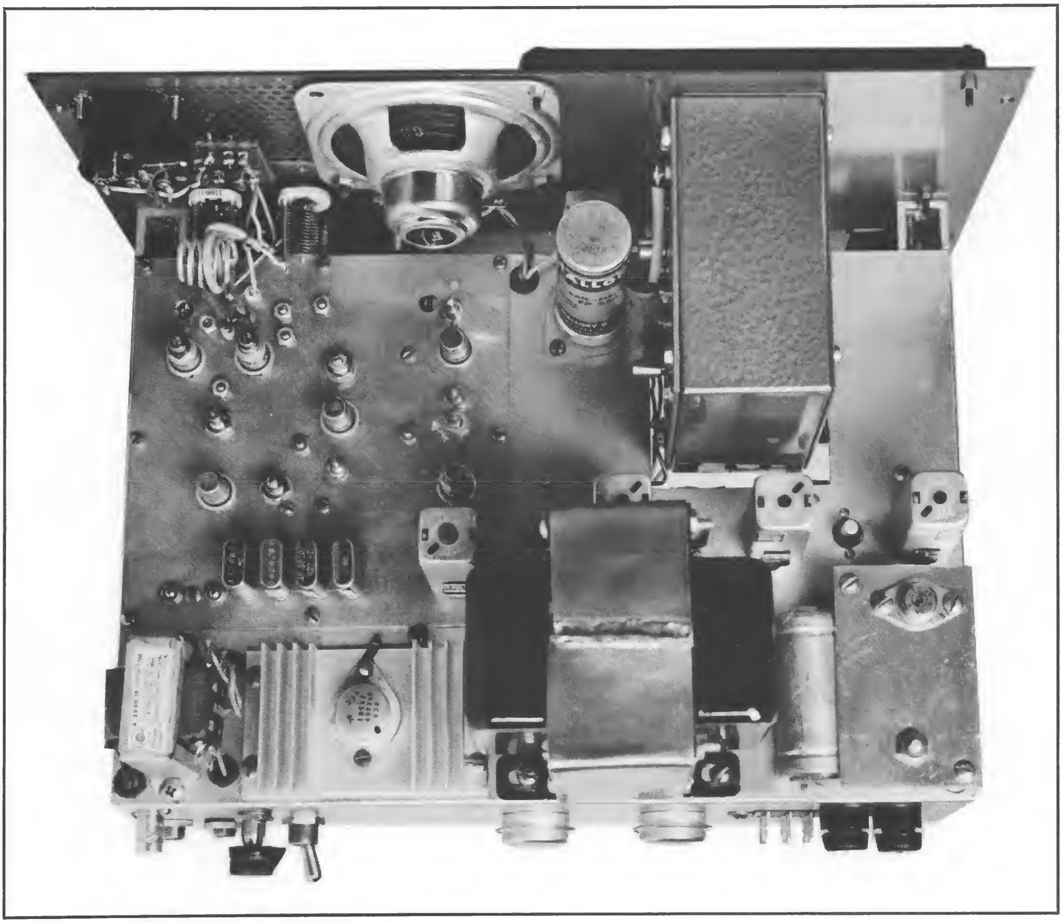

Figure 4: Top view of transceiver shows locations of nuvistors, transistors, and other major components. Incorporated on back of chassis are the microphone jack, speech-gain control, microphone switch, earphone jack, antenna connection, and the transceiver's power plug and fuses.

drilled and fitted with Alden #651T lugs. It can be duplicated by use of pre-drilled boards and lugs made by Vector (85F24EP board and T 9.4 lugs) or any other such manufacturer. To prevent local motorboating or feedback howls, it is recommended that no appreciable deviation in layout be made. For example, audio transformer T_5 — originally mounted on the audio-AVC-ANL terminal — was relocated near the front of the chassis to eliminate a hum caused by magnetic pickup from the power transformer above the chassis. Relocation of T_5 greatly reduced the hum; but the placement of a shorted loop of copper around the outside of the power transformer core virtually eliminated the disturbance through dissipation of the radiated energy.

To minimize the magnetic coupling between the two transformers (T_5 and T_9), an aluminum chassis and cabinet are recommended to all builders of the transceiver.

The 12-volt rectifier and the regulator transistor, Q_{11}, are mounted on a 2-inch-by-3-inch-by-1/8-inch aluminum plate that is insulated (electrically) from the main chassis, and is an adequate heat sink for those components.

To dissipate the heat generated in the audio power stage, Q_{10} — especially during its operation as a modulator in the transmit mode — a much larger heat sink is required. This transistor, in which the collector is internally connected to the case, is thermally grounded but electrically insulated from the chassis through the use of mica or anodized aluminum washers between the case and the chassis.

Because the collectors of Q_{12} and Q_{13} operate at circuit ground, these transistors are mounted directly on the main chassis.

RCA HAM TIPS is published by RCA Electronic Components and Devices, Harrison, N.J. It is available free of charge from participating RCA Industrial Distributors. It is also available on a two-year subscription basis ($1 for eight issues to cover costs of handling and mailing). Please make check or money order payable to Radio Corporation of America, and remit to "Radio Corporation of America, Section 882, Harrison, New Jersey."

WHEN MAILING
PLACE POSTAGE HERE

TOP BERKS COUNTY

READING PA.
U.S. POSTAGE 02 1/2
PB METER 314629

CLK. RT.
AD'L. 3/8¢ PD.

DISTRIBUTED BY
GEORGE D. BARBEY CO., INC.
READING LEBANON
LANCASTER POTTSTOWN

Information furnished by the Radio Corporation of America is believed to be accurate and reliable. However, no responsibility is assumed by RCA for its use; nor for any infringements of patents or other rights of third parties which may result from its use. No license is granted by implication or otherwise under any patent or patent rights of RCA.

NOW BETTER THAN EVER!

The famous RCA WV-38A Volt-ohm-Milliammeter

NEW FEATURES...

COLOR-CODED FRONT PANEL MARKINGS simplify operation, reduce chance of error.

METER MOVEMENT PROTECTED AGAINST BURNOUT. Special silicon diodes guard meter against overload.

PLUS...

POLARITY REVERSAL SWITCH. Reverses polarity of test leads without need for re-connecting. Handy for checking front-to-back resistance ratio of electrolytic capacitors and many types of semiconductor devices.

39 DIFFERENT MEASUREMENT RANGES.

MEASURES CURRENT from 50 microamps full scale to 10 amps full scale.

SPECIAL 0.25 volt and 1.0 volt (full-scale) DC ranges...useful in checking transistor circuits.

...and many additional features that have made this instrument the best V-O-M buy on the market today. Only **$47.95***. Kit version, WV-38A(K), only $29.95*.

See it at your Authorized RCA Electronic Instrument Distributor.

*Optional distributor resale price. Prices subject to change without notice. Prices may be higher in Alaska, Hawaii and the west.

RCA ELECTRONIC COMPONENTS AND DEVICES, HARRISON, N.J.

RCA **The Most Trusted Name in Electronics**

RCA® HAM TIPS

A PUBLICATION OF RCA ELECTRONIC COMPONENTS AND DEVICES

VOL. 25, NO. 3 ©1965, RADIO CORPORATION OF AMERICA SUMMER, 1965

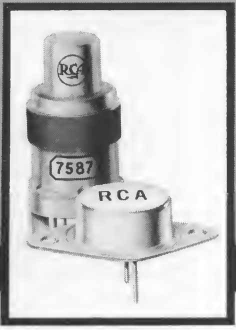

Transistors and Nuvistors In a Two-Meter Transceiver

By R. M. Mendelson, W2OKO*
RCA Electronic Components and Devices

Part II

In the preceding (Spring, 1965) issue of HAM TIPS, readers were introduced to a unique two-meter transceiver that employs both transistors and nuvistors for the purpose of achieving an effective compromise in all-around economy and operating efficiency. In the first installment, the author covered such basic considerations as design concept, block layout, the schematic, and construction details.

In this issue, Mr. Mendelson concludes his two-part article with a discussion of the alignment, tuning, and adjustment of the receiver and transmitter sections.

Receiver Alignment and Adjustment

Alignment of the receiver section is accomplished by using the "S" meter as the alignment indicator. An up-scale movement of approximately one division (when the AC power is applied to the transceiver) is an indication that the meter circuit is properly balanced. If this movement is more than one division, the value of R_{43} should be changed. The alignment procedure is as follows:

1 — Apply a 1-Mc signal from a signal generator to the base of Q_1 (2N372 mixer stage) and successively tune each of the six IF-transformer windings for a maximum "S"-meter reading. As the tuning progresses, reduce the input signal strength.

2 — Apply an audio frequency to the 1-Mc signal. A good clean tone from the speaker indicates that the audio system is operating properly.

3 — Adjust the tunable receiver oscillator (VFO) as follows:

a) With trimmer C_{32} set to mid-range and the receiver dial of the transceiver at close to full scale, pick up the oscillator signal on a communications receiver that is tuned to 12.7 Mc.

b) Adjust the trimmer so that 12.7 Mc appears at about 90 on the transceiver dial.

c) Search the bottom end of the transceiver dial for a signal of 10.7 megacycles.

d) C_{32} should be adjusted to center the oscillator range of 10.7 to 12.7 megacycles across 80% of the tuning dial.

4 — Apply an 11.7-Mc signal to the grid of V_2 (7587 mixer stage) and adjust the top slug of T_1 for a maximum "S"-meter reading.

5 — The final step is the tuning of the front-end for 144-to-148 Mc operation. Using a grid dip meter, set L_1, L_3, and L_4 to 146 megacycles; L_5 to 45 megacycles; and L_6 to 134 megacycles. Connect the antenna. If all wiring is correct, 2-meter signals should be heard. If no signals are heard, verify operation of the crystal oscillator by removing the

---

*Commercial Receiving Tube and Semiconductor Division, Somerville, New Jersey

44.76-Mc crystal from its socket. The background noise should fall off. A slight readjustment of L_5 may be necessary to start the oscillation. L_6 should be peaked for maximum oscillator output. Tune in a signal at approximately 145 megacycles and adjust L_3 for a maximum "S"-meter reading. Repeat with a signal at 147 megacycles and tune L_4 for a maximum "S"-meter reading. Remember that the receiver is simultaneously tuning both 145 and 147 megacycles; be sure the signal frequency corresponds to the coil that is being tuned.

The antenna coil, L_1-C_1, should be tuned to approximately 146 megacycles. The top slug of T_1 may be adjusted slightly for equal reception over the whole band.

Neutralization is easily obtained by adjusting L_2 for minimum feedthrough of a strong signal when the plate voltage of V_1 is zero. This adjustment is not too critical. The receiver alignment is then complete except that touch-up of the tuning might be necessary to provide the whole band with equal sensitivity.

NOTES

(1) if hum is objectionable, T5 may have to be moved

(2) all +12V (1) lines may be joined and connected to arm of $S3_A$

(3) all +12V (2) lines may be joined and connected to $S3_A$ - receive

(4) all grounds may be joined to form a common ground

(5) detector D3 (Type IN295) and C46 (120 pf) are mounted at T4 (2nd IF)

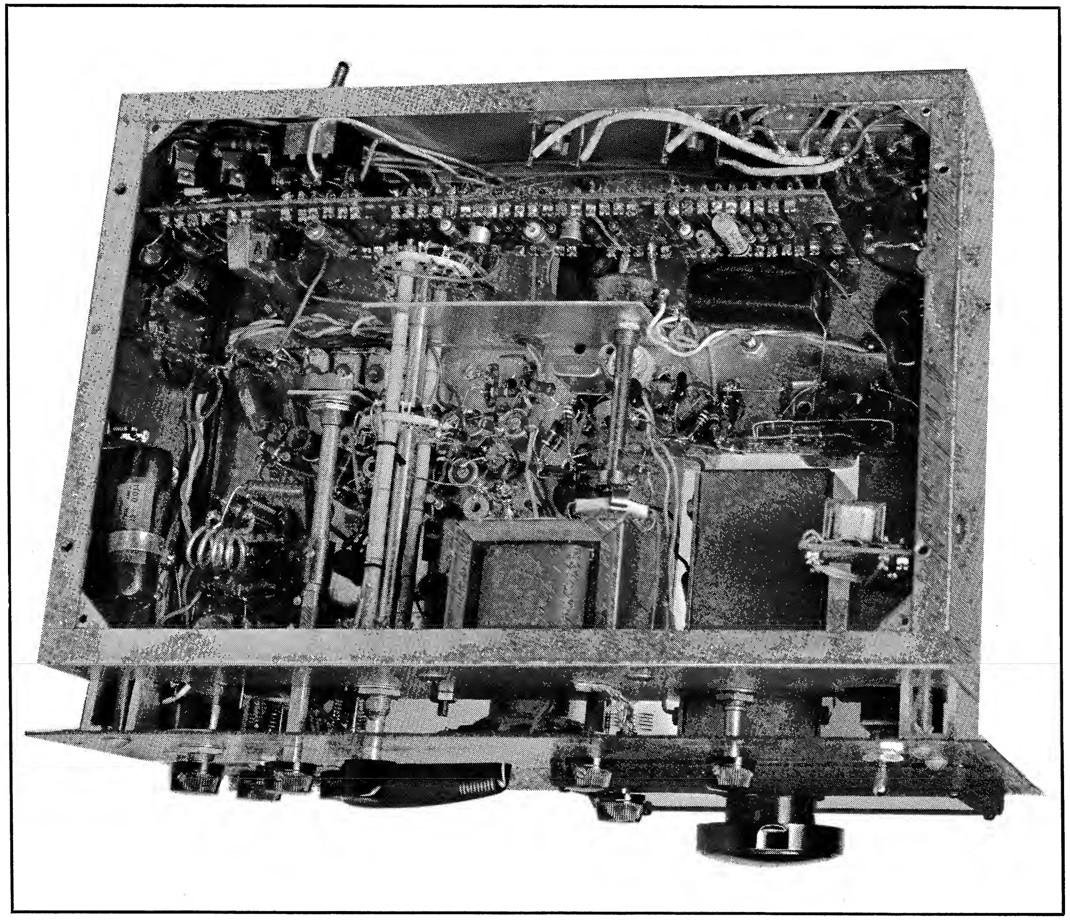

Figure 5: Bottom view of transceiver highlights terminal strip and its mounted components. Also visible in photo are the transmit-receive switch, transmitter crystal switch, crystal filter, and the speech-gain control. Note new location of audio transformer (upper right), which was removed from original position to minimize a hum that was caused by magnetic pickup from the power transformer located on the top side of the chassis.

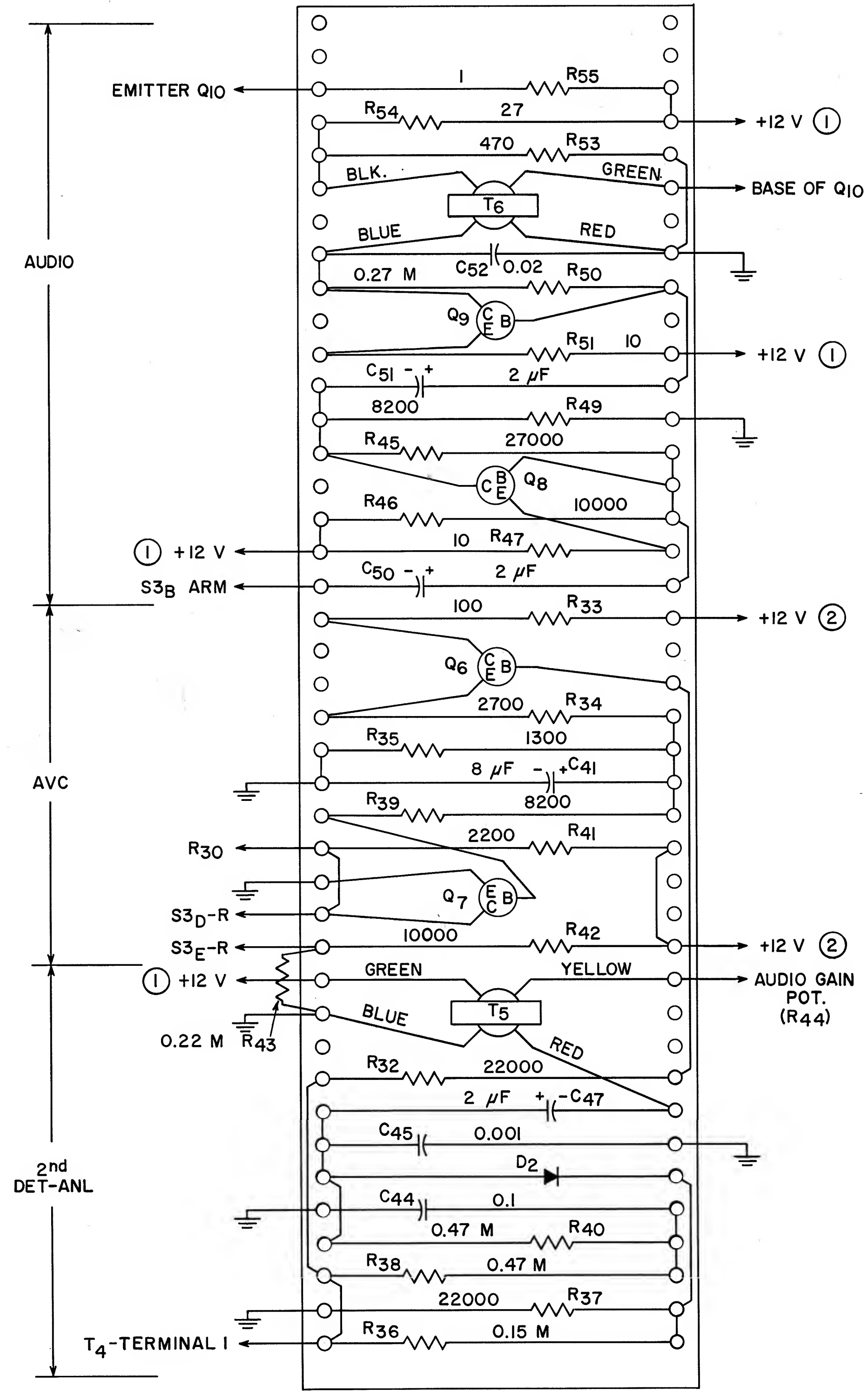

Figure 6: Detail on transceiver's Audio-AVC-ANL terminal board, including pertinent footnotes.

RCA HAM TIPS is published by RCA Electronic Components and Devices, Harrison, N.J. It is available free of charge from participating RCA Industrial Distributors. It is also available on a two-year subscription basis ($1 for eight issues to cover costs of handling and mailing). Please make check or money order payable to Radio Corporation of America, and remit to "Radio Corporation of America, Section 882, Harrison, New Jersey."

Transmitter Tuning and Adjustment

Tuning the transmitter is easily accomplished as follows:

1 — With power off and all nuvistors in place, tune L_7 to 49 megacycles and L_{12} and L_{17} to 144 megacycles, using the grid dip meter. After this, remove the two 7587 final nuvistors and turn on the power.

2 — Throw the send-receive switch to the transmit position. Connect a high-impedance voltmeter across R_{62} and adjust L_7 for a maximum reading (approximately 10 volts) on the voltmeter for indication that V_3 is oscillating. To insure positive starting of the oscillator, back the slug out to give a slightly higher tuned frequency.

3 — After turning off the main power, disconnect the 240 volts from the plates and screen grids of the final amplifier. Plug in the 7587 final nuvistors, turn on the power, and set the meter switch to TP_1 (final grid current). Tune C_{64} for a maximum meter reading (usually between one and two milliamperes). Rotation of the plate-tuning capacitor, C_{58}, through its entire range should have very little effect on the grid current. Minimize this effect by adjusting C_{59}, the screen-grid bypass capacitor.

4 — Again, disconnect the AC power and reconnect the 240 volts to the final amplifier plates and screen grids. Switch the meter to TP_2 (plate current) and attach the antenna or a dummy load to the transceiver. Turn on the power. After the nuvistors warm up, tune C_{58} (in the final-amplifier plate circuit) for a dip.

5 — Turn the meter switch to TP_3 (power output) and adjust C_{58} and C_{55} for a maximum power-output reading. The capacitor, C_{55}, tunes out feed-line reactance.

Modulation can be introduced through either an external carbon mike or the built-in speaker. Adjust the gain control on the rear of the chassis for 100% modulation with no distortion.

The receiver is now completely tuned. When transmitter frequencies are changed, only the final-amplifier capacitors on the front panel (C_{55} and C_{58}) need be readjusted.

If the DC-to-DC converter and power plug have been wired correctly, the unit can also be portably operated from any negative grounded 12-volt DC supply.

The transceiver will perform very well for long periods with little maintenance and will provide many hours of pleasurable operation.

ACKNOWLEDGMENT. The author wishes to thank Harry Thanos, Entertainment Applications, Commercial Receiving Tube and Semiconductor Division, RCA Electronic Components and Devices, Somerville, New Jersey, for his mathematical assistance in transistor applications.

HAM TIPS

A PUBLICATION OF RCA ELECTRONIC COMPONENTS AND DEVICES

VOL. 25, NO. 4

FALL, 1965

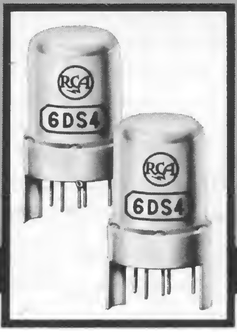

Paralleled Nuvistors on 220 Megacycles

By D. W. Nelson, WB2EGZ*
RCA Defense Electronic Products

The ingenious little RCA nuvistor has been universally accepted for its high performance at relatively low cost. Automated assembly techniques used in its construction have enhanced the uniformity of characteristics from tube to tube. In fact, test matching is generally unnecessary when using two nuvistors in parallel.

Objectives of Experiment

A grounded grid amplifier is relatively easy to neutralize and features a very low noise

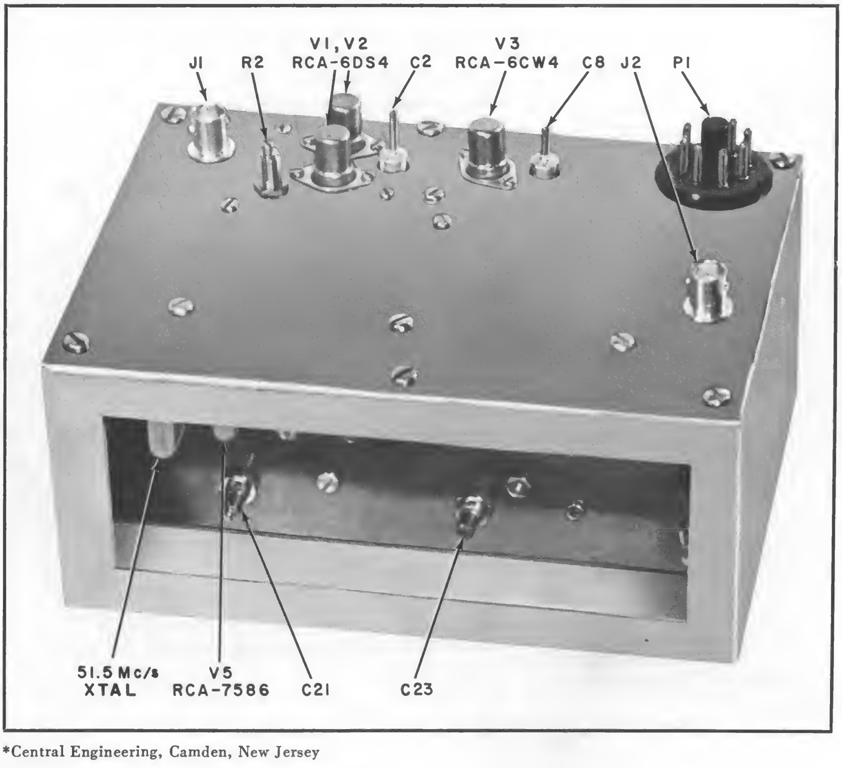

Figure 1: Exterior view of WB2EGZ's 220-Mc nuvistor converter. Note cutout in the chassis to provide easy access to oscillator, multiplier, and IF amplifier tuned circuits. RF stages are tuned from the top.

---

*Central Engineering, Camden, New Jersey

figure and a wide dynamic range which minimizes overloading by strong signals. The compromise is a slightly lower gain. The author began his experiment on the premise that a paralleled grounded-grid, front-end could compensate for this loss in gain. The 220-Mc band was chosen because it is generally the "cross-over" band from neutralized grounded-cathode circuits to grounded-grid techniques. As will be shown, the RCA HAM TIPS 432-Mc converter design[1] is easily adapted to "220" service, thereby eliminating many hours of experimentation.

Ideally, perhaps, the 220-Mc converter described in this article should have been made with RCA-8058 double-ended, high-mu triode nuvistors. One objective of this experiment, however, was to obtain better performance on the average Ham's budget. Consequently, the leading role was assigned to two paralleled RCA-6DS4 semiremote-cutoff, high-mu nuvistor triodes. If the RF gain control were omitted, equal performance would be obtainable from RCA-6CW4 high-mu triodes. A 6CW4 was employed for the second stage, also a grounded-grid stage.

Second-stage output is mixed with local oscillator-multiplier output by a 1N830 diode. A 1N82A mixer diode serves equally well.

A low-noise, bandpass IF amplifier that follows, employs the RCA-7587 sharp-cutoff nuvistor tetrode. This stage is identical to that of the earlier-mentioned K2BTM converter.

It has been argued that the diode mixer is unnecessary on this band. The author generally concedes this point, but simultaneously attributes the lack of image interference (another objective) in this commendable circuit to the use of the 14-19-Mc bandpass filter.

The oscillator-multiplier section uses an RCA-7586 medium-mu nuvistor triode as the 51.5-Mc oscillator and a 7587 as a quadrupler. In the original design, a 6CW4 was employed as the oscillator, but the 7586 favors the circuit with greater output and less critical tuning. Output of the 7587 is more than adequate for injection purposes.

Circuit and Construction Hints

It is doubtful that any construction-type article can anticipate and answer all the questions which might arise in the builder's mind, however, here are some pertinent items that might prove helpful:

A 5-by-7-by-3-inch aluminum chassis is used as an enclosure (see Figure 1). In the author's experience, thin copper with soldered joints provides the best chassis and shield material. The various shield layouts are illustrated in detail in Figure 5.

All tube sockets have been soldered to the chassis as well as to shields on the RF amplifiers.

Although theory might prove that a grounded-grid stage is self-neutralizing, the short strand of wire connecting the grid to ground is a pickup loop which may introduce feedback. Contact potential of the tube already has biased it into an unstable region which increases the tendency to oscillate.

Shields were necessary on the RF stages of the unit. Good plate-tank capacitors were also required.

One or two additional 10-pf ceramic-disc capacitors in parallel with the feedthrough capacitor (C_9) may help reduce any instability in the second RF stage.

In the first unit constructed by the author, front-end stability was achieved without cathode resistors and with grids grounded directly. This stability, however, was not present in the second unit constructed. One method of overcoming the contact potential problem, used with the 6CW4 stage, is to lift the grid off DC ground, bypass it with a 500-pf capacitor, and provide a suitable DC return (47K) to the cathode. The grid-bypass capacitor may be varied to effectively reduce the grid to ground inductance, enhancing stability.

An RF gain control (R_2) is a "must" for reducing strong SSB signals to detectable levels. The author also found this control useful in alignment and for optimizing signal-to-noise levels.

For stable operation of the RF stages, close-fitting shields across V_1, V_2, and V_3 sockets are mandatory. Lead dress of the heater ground choke (RFC_8) is made close to the socket in such manner that the choke is on the input side of the shield (see Figure 4). If no choke is used on the ground side of the heater, the input is attenuated by heater-to-cathode shunt capacitance to ground. Regardless, direct grounding of the heater of V_3 offers one possibility for stopping oscillation if the shield does not fit tightly.

Button-mica capacitors should be separated from the chassis by star washers in order to insure a good ground.

Constant removal and installation of tubes can result in loosened tube-shell contacts. Builders seeking to avoid this possibility

---

[1] Filipczak, J. M., K2BTM, "A Nuvistor Converter for 432 Megacycles," RCA Ham Tips Volume 22, No. 3, Fall, 1962.

should consider the use of sockets with fingered shells (Cinch 5NS-3), particularly with respect to V$_1$, V$_2$, and V$_3$.

In high-frequency operation, it is important to remember that leads should be kept extremely short and sharp bends avoided.

Alignment Procedure

Proper alignment commences with the oscillator-multiplier, and the procedure is as follows:

(1) Insert, both, the 7586 (V$_5$) and the

7587 (V$_6$) with the crystal. Using a VTVM across the crystal, adjust C$_{21}$ for a reading. This reading should approximate —4 volts.

(2) Check the grid-No. 1 voltage on V$_6$. A reading of —22 volts should result. If adjustments of C$_{21}$ and C$_{23}$ fail to bring grid voltages within 20% of the aforementioned values, the wiring should be checked. Possible sources of trouble might be bypass capacitors C$_{19}$, C$_{22}$, and C$_{25}$.

(3) The "B+" now should be turned off and on to ascertain that the oscillator will

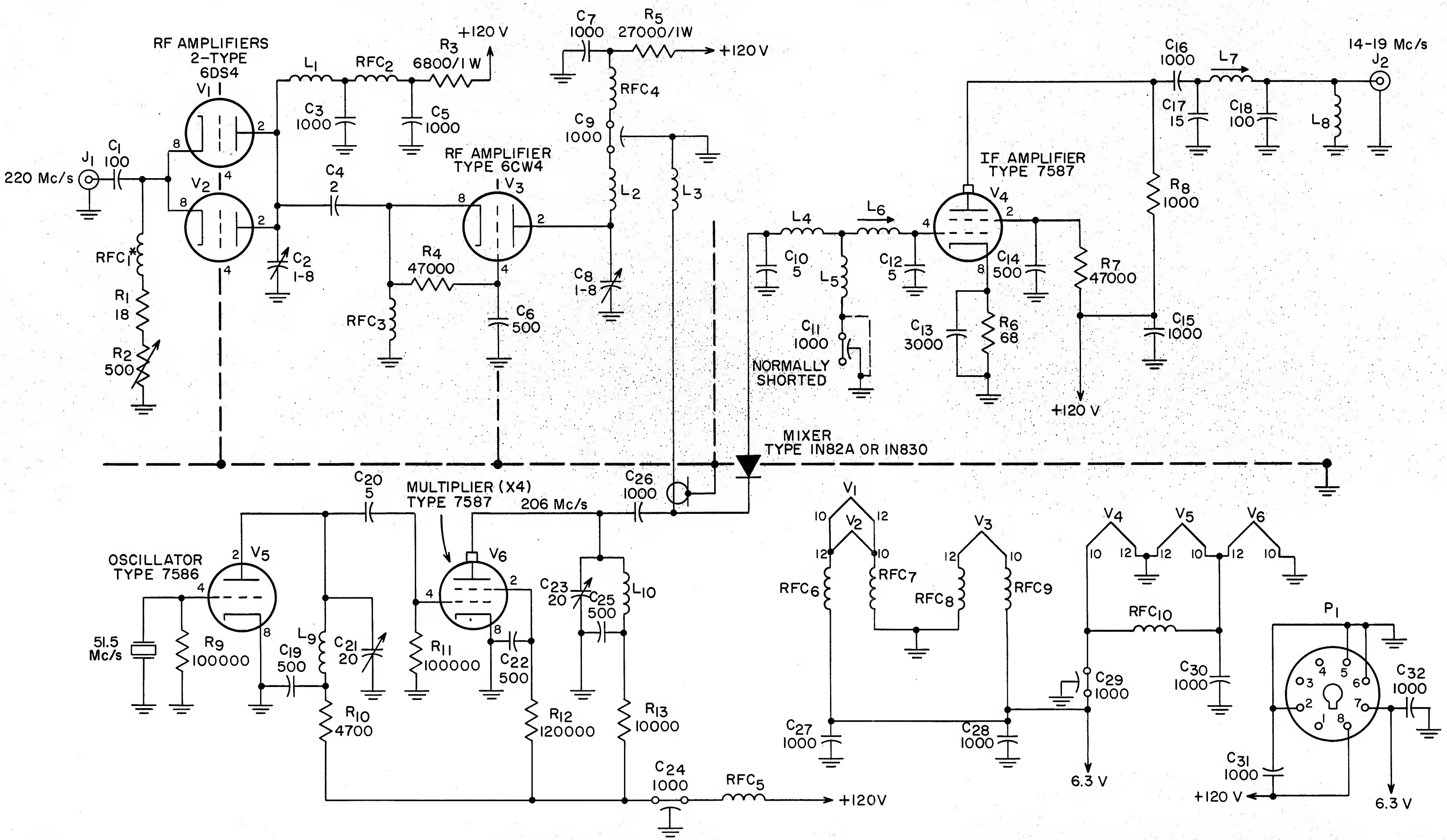

C$_1$—100 pf ceramic tubular (Centralab TC2 or equiv.)
C$_2$, C$_8$—1 to 8 pf trimmer (Erie 532B or equiv.)
C$_3$, C$_{27}$, C$_{28}$—1,000 pf button mica (Erie 370 FA-102K or equiv.)
C$_4$—2 pf, ceramic tubular
C$_5$, C$_7$, C$_{26}$, C$_{30}$, C$_{31}$, C$_{32}$—1,000 pf, ceramic disc
C$_6$, C$_{14}$, C$_{19}$, C$_{22}$, C$_{25}$—500 pf, disc ceramic (Centralab DD501 or equiv.)
C$_9$, C$_{11}$, C$_{24}$, C$_{29}$—1,000 pf, feed-through (Centralab MFT 1000 or equiv.)
C$_{10}$, C$_{20}$—5 pf, ceramic tubular (Centralab TCN or equiv.)
C$_{12}$—5 pf, N. P. O. ceramic (Centralab DT2 or equiv.)
C$_{13}$—3,000 pf, ceramic disc (Centralab DD302 or equiv.)
C$_{15}$, C$_{16}$—1,000 pf, ceramic disc (Centralab DD102-G or equiv.)
C$_{17}$—15 pf, N. P. O. ceramic (Centralab DT2 or equiv.)
C$_{18}$—100 pf, silver mica (Arco Electronics CM-15 or equiv.)
C$_{21}$, C$_{23}$—20 pf, miniature (E. F. Johnson 160-110 or equiv.)
D$_1$—1N82A or 1N830
J$_1$, J$_2$—BNC-type connector (UG-290AU)
L$_1$—2 turns, No. 18, ¼-inch diameter
L$_2$—3 turns, No. 18, ¼-inch diameter
L$_3$—1 turn, No. 18, at ground end of L$_2$
L$_4$, L$_8$—9 turns, No. 26 enamelled wire, close-wound on ¼-inch-diameter poly form
L$_5$—18 turns, No. 26 enamelled wire, close-wound on ¼-inch-diameter poly form
L$_6$—28 turns, No. 26 enamelled wire, close-wound on ⅜-inch-diameter slug-tuned form (CTC-LS-5 or equiv.)
L$_7$—20 turns, No. 26 enamelled wire, close-wound on ⅜-inch-diameter slug-tuned form (CTC-LS-5 or equiv.)
L$_9$—6 turns, No. 20, ½-inch diameter (B & W 3003)
L$_{10}$—1 turn, No. 18 enamelled wire, ½-inch diameter
R$_1$—18 ohms, ½ watt
R$_2$—500 ohms, min. pot A. B., ⅓-watt type
R$_3$—6,800 ohms, 1 watt
R$_4$, R$_7$—47,000 ohms, ½ watt
R$_5$—27,000 ohms, 1 watt
R$_6$—68 ohms, ½ watt
R$_8$—10,000 ohms, 1 watt
R$_9$—27,000-to-100,000 ohms, ½ watt (see text)
R$_{10}$—4,700 ohms, ½ watt
R$_{11}$—100,000 ohms, ½ watt
R$_{12}$—120,000 ohms, ½ watt
R$_{13}$—10,000 ohms, ½ watt
RFC$_1$, RFC$_2$, RFC$_3$, RFC$_4$, RFC$_5$, RFC$_6$, RFC$_7$, RFC$_8$, RFC$_9$, RFC$_{10}$—12½ inch, No. 30 enamel on 1 meg, ½-w resistor or 0.82 μH commercial type
V$_1$, V$_2$—6DS4
V$_3$—6CW4
V$_4$, V$_6$—7587
V$_5$—7586
Miscellaneous—One crystal socket; one crystal, 51.5-Mc overtone (International Crystal Company Type FA5 or equiv.); six nuvistor sockets (Cinch 5NS-1 or equiv.) see text; one chassis, aluminum, 5-by-7-by-3 inches (Bud AC 429 or equiv.).

NOTES

(1) RFC$_1$ through RFC$_{10}$ are 0.82 μH.
(2) All resistance values in ohms, ½ watt, and composition unless otherwise noted.
(3) All capacitance values expressed in picofarads.

Figure 2: Schematic diagram and parts list of WB2EGZ's 220-Mc nuvistor converter.

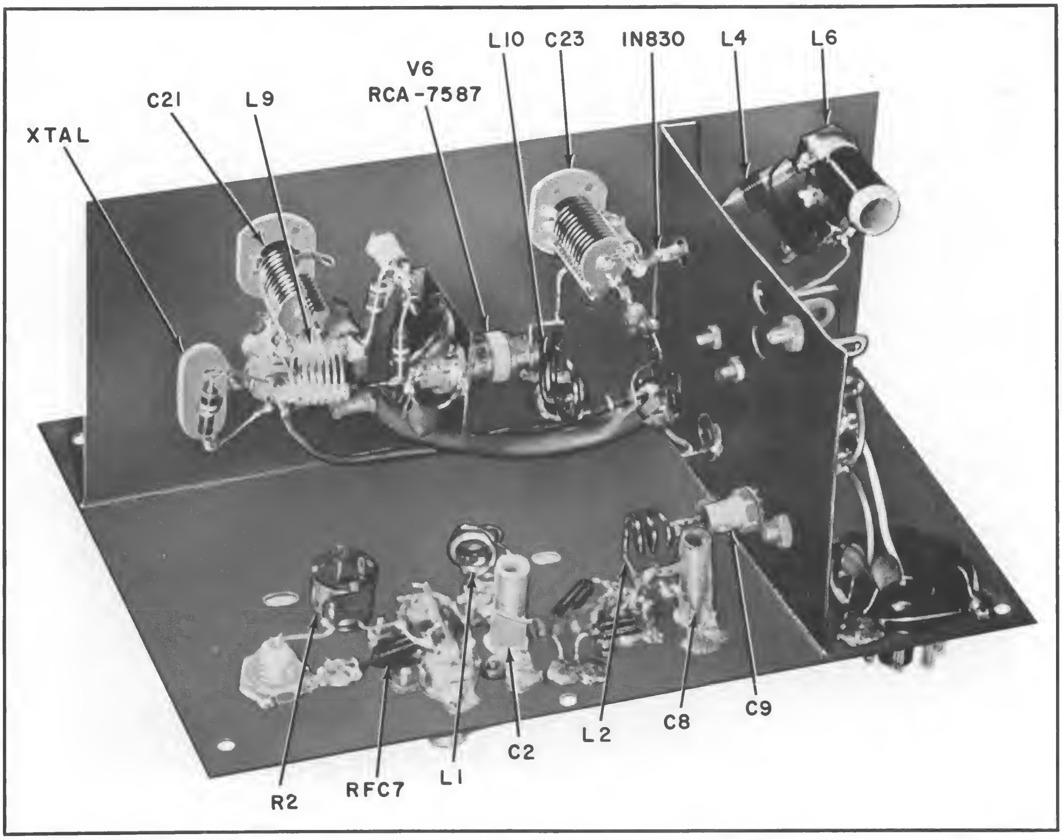

Figure 3: Underside of converter with shielding removed from the RF section. The 1N830 mixer diode is seen feeding through the shield near the 206-Mc plate tank capacitor. RF section wiring shown here is incomplete.

function each time. If it doesn't, decrease the capacitance of C_{21} slightly. While no problems have been encountered with crystals in three similar oscillators, it seems appropriate to point out that the 100,000-ohm resistor (R_9) should be reduced in the event that a crystal fails to oscillate, but to no lower than 27,000 ohms.

Adjustment of the quadrupler may prove more difficult. Two distinct harmonics may be tuned, but only the fourth harmonic is correct. For aligning the quadrupler, connect a milliammeter across C_{11} (with short removed) and tune C_{23} for a peak. If two peaks are noted, the one of greater amplitude probably will be 206 megacycles. If a grid-dip oscillator is available, it can be used here to determine the correct frequency. The diode current should now be adjusted to 1 mA by adjusting C_{23} and/or C_{21}.

"Rough" tuning of the IF amplifier can be achieved "by ear" when the converter is connected to a receiver. L_6 should be peaked near one end of the *used* portion of the band, e.g., 14.1 megacycles, while L_7 should be peaked near the other end, e.g., 15.4 megacycles. Although more precise alignment can be obtained through use of a signal generator, the instrument was judged unnecessary in this instance. Retuning while copying a weak signal is the author's favorite sport.

In the event that no strong 220-Mc source is available, a grid-dip oscillator is needed for aligning the RF amplifiers. After V_3 is inserted, adjust its plate tank to approximately 220 megacycles with the tube heaters turned "on." (To couple the tank coil to the grid-dip oscillator, the author employed a link of twisted hookup wire with 3/8-inch loops on each end.) If oscillation occurs with the B+ turned on, slight detuning may be necessary. (Oscillation also can be corrected by inserting a resistor of about 100 ohms between the cathode choke [RFC_3] and ground.) Now, insert V_1 and V_2 and tune their plate tank in a similar manner. Final peaking can be achieved by an "on-the-air" check.

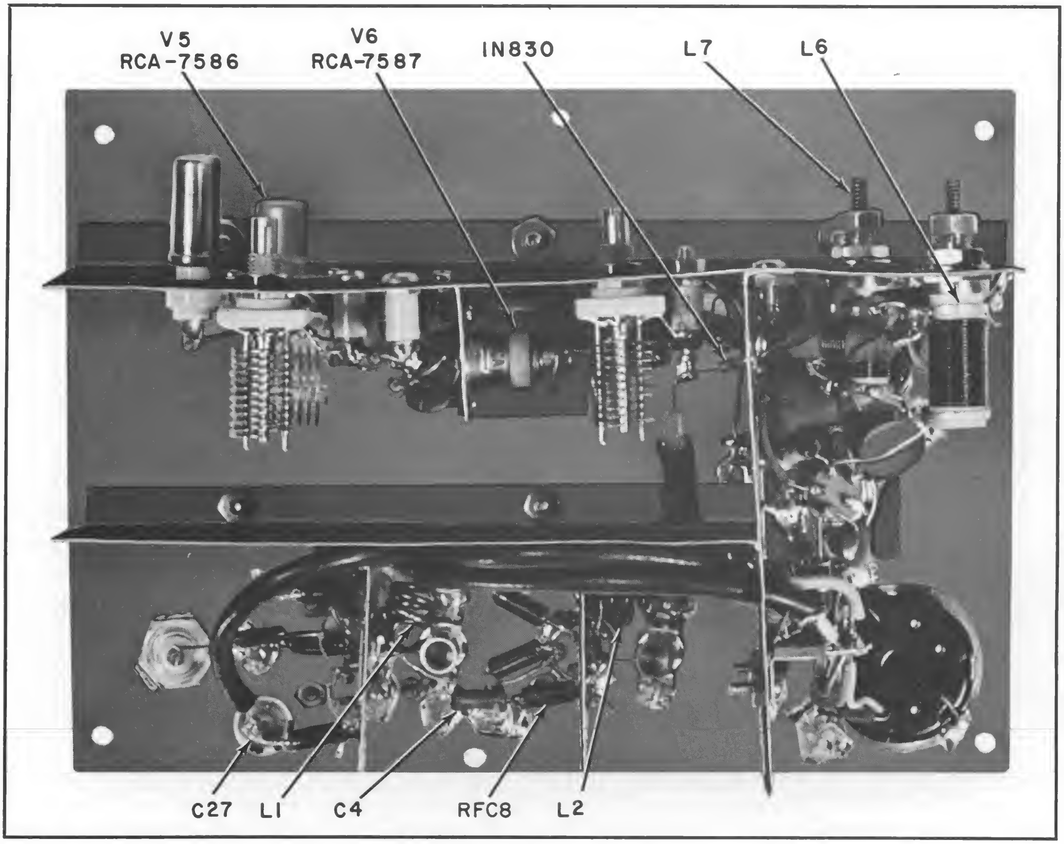

Figure 4: Completed underside of converter showing tube shields and section shields. The plate resistors of the RF stages are in the IF section near the power plug.

Circuit Performance

Performance of nuvistors at different operating levels has been the subject of several articles in popular radio magazines. It must be emphasized that this article, however, is primarily concerned with the 6DS4 — which accounts for the main difference between the author's results and those achieved by using the 6CW4.

The resistor in the 6DS4 plate circuit (R_3) was replaced by a "pot" which was adjusted for optimum readability of a weak signal. Best results were obtained when the pot was set near 6,800 ohms — hence, the value shown. Two paralleled 6DS4's were then tested for G_m under the same conditions, indicating a level of 23,000 micromhos at a total plate current of 10 mA. Further reduction of R_3 yields a slightly higher transconductance, but achieves no apparent gain in the circuit's performance. Best level of plate voltage on the nuvistors was 49 volts.

A similar test performed on the 6CW4 stage produced less dynamic results. A plate resistor of 27 K appeared to be optimum. Tests to determine the level of the 6CW4 stage showed its G_m to be 7,200 micromhos at a plate current of 3 mA. In this instance, plate voltage was about 36 volts.

It was suggested that a performance comparison be made by removing one 6DS4 and retuning the plate tank. While this can be done, the results are often misleading. Because the plate resistor has not been changed, *the remaining 6DS4 will not be operating at the same plate current as before,* and the decrease in performance will be greater than if current level had remained the same. A test was made, however, by operating the single 6DS4 at the same current and voltage level. Many previously readable signals were now "in the noise."

The serious experimenter can obtain an improvement in the circuit by carefully matching the input circuit to the antenna. This can be achieved through use of an input tank cir-

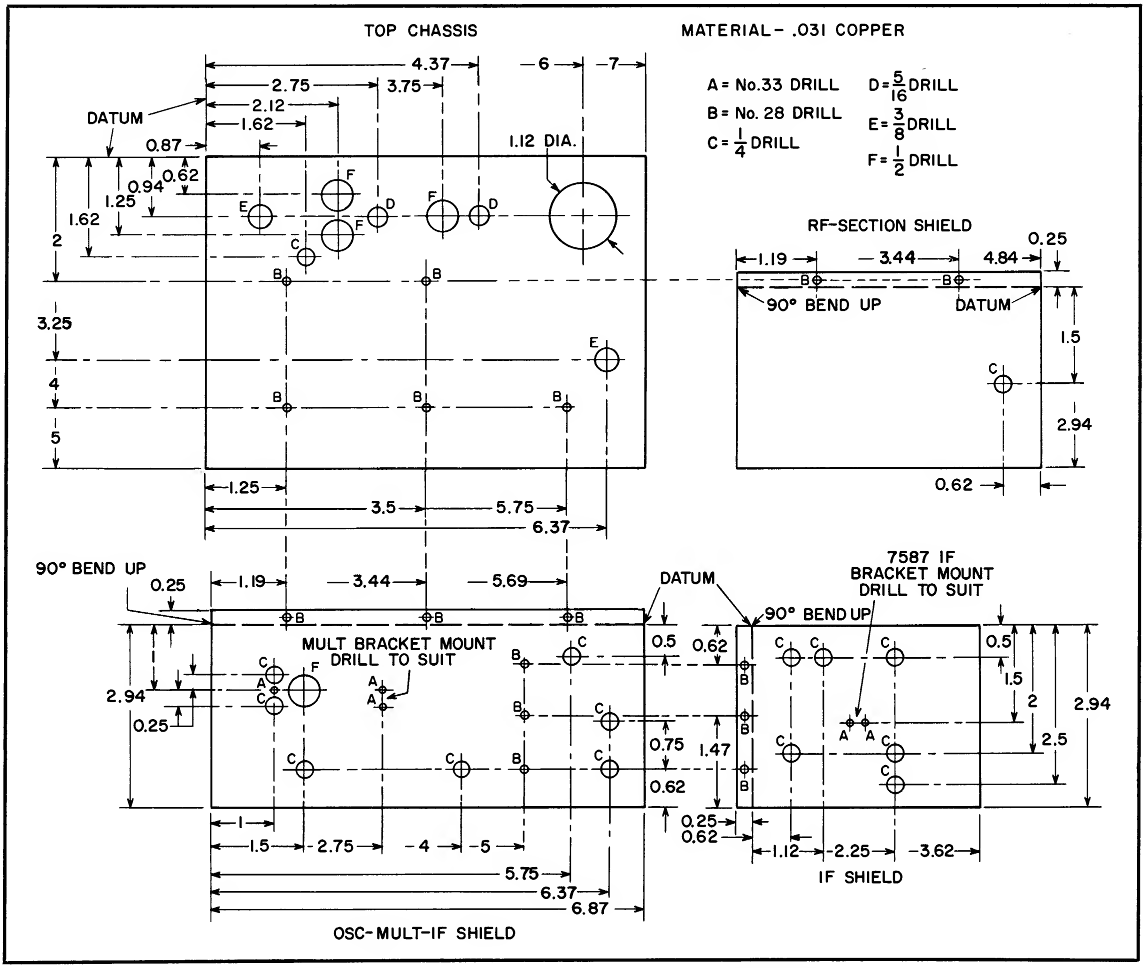

Figure 5: Converter shield layouts and material specifications.

cuit. A simpler approach, however, is to tap C_4 down on L_1 for optimum noise figure. At this frequency, optimized noise figure should coincide with maximum gain.

It should be reported that the converter described in this article has not been plagued by the images and "garbage" so frequently encountered by Hams on the 1¼ meter band. In the Philadelphia area, the first TV interference on the band occurred above 221.6-Mc. Large credit for the high performance of the unit can be attributed to use of high-Q plate tanks in the RF stages, proper shielding, and the filtering of the IF stage.

An "on-the-air" comparison was made with a converter using cascaded 5842's in the grounded-grid configuration. "Ear-test" results and readings of S-levels above the noise showed the performance of the nuvistor converter to be equivalent.

The reliability of this converter has been proved in the past year's performance. It is felt that the design eliminates several problems of other "220" converters, making construction and alignment more practical. For the adventuresome amateur seeking excitement on a new band, this unit is a worthwhile project.

From a personal standpoint, the author found the converter experiment especially rewarding not only for its numerous challenges and interesting results, but for its special endorsement of 220 megacycles — too long neglected as the "orphan" band of ham radio.

ACKNOWLEDGEMENT. The author wishes to thank Steve Wojcik for detailed photography and Ken Uhler for his review and comments. To Bob Berger, K2ZNY, and Bill Schaefer, WA2EMB, go special appreciation for their continual interest and many helpful suggestions.

RCA HAM TIPS is published by RCA Electronic Components and Devices, Harrison, N.J. It is available free of charge from participating RCA Industrial Distributors. It is also available on a two-year subscription basis ($1 for eight issues to cover costs of handling and mailing). Please make check or money order payable to Radio Corporation of America, and remit to "Radio Corporation of America, Section 882, Harrison, New Jersey."

WHEN MAILING
PLACE POSTAGE HERE

READING PA.
U.S. POSTAGE
02½
PB METER 314629
BLK. RT. ADDL. 3/2¢ PD.

DISTRIBUTED BY
GEORGE D. BARBEY CO., INC.
READING LEBANON
LANCASTER POTTSTOWN

Save battery power with the
RCA "quick heat" Beam Power Tube

Mobile rigs using the RCA-4604 "quick heat" tube *conserve* filament battery power while operating. It requires *no* filament power in standby, resulting in reduced battery drain . . . you'll be drawing filament battery power *only* when transmitting.

Similar in capabilities to the famous RCA-6146 Family, the sturdy RCA-4604 has a maximum plate dissipation of 25 watts under ICAS conditions in cw and fm telephony service. At this service, it can be operated with full input to 60 Mc and with reduced input to 175 Mc.

For additional information on the RCA-4604 and its use in mobile rigs, contact Commercial Engineering, Section J-37-M, Harrison, N.J.

RCA ELECTRONIC COMPONENTS AND DEVICES

The Most Trusted Name in Electronics

RCA HAM TIPS

A PUBLICATION OF RCA ELECTRONIC COMPONENTS AND DEVICES

VOL. 26, NO. 1 WINTER, 1965-66

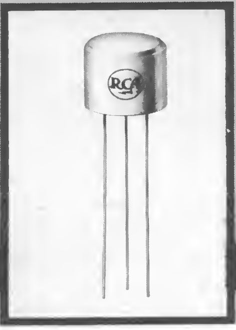

All-Transistor Two-Meter Converter

By R. M. Mendelson, W2OKO*

RCA Electronic Components and Devices

Until recently, the benefits of an all-transistor, two-meter converter have been outweighed by the unavailability of suitable VHF transistors at a reasonable price.

Today, however, the radio amateur has at his disposal three new RCA transistors offering wide advantages in both cost and electrical characteristics over their tube counterparts. VHF types 40235, 40236, and 40237, for example, enable the amateur to easily obtain noise figures of less than 3 dB at 144 Mc/s. Their small size, instant startup, and excellent reliability are additional features which help meet the requirements of a high-quality converter. Furthermore, the 12.6-volt, 10-milliampere power requirement is ideally suited to mobile operation. In the home station, power is quickly derived through any one of the several methods later described in this article.

In the Figure-2 schematic, the RCA-40235 VHF transistor is shown in the role of a neutralized low-noise RF amplifier. An RCA-40237 — used as an overtone crystal oscillator-multiplier — provides an output frequency of 118 Mc/s in one stage. The output from this stage, which is the transistor equivalent of the nuvistor one-stage oscillator described by the author in earlier articles,[1] is mixed with the output of the RF-amplifier stage in an RCA-40236 mixer stage.

The low internal feedback capacitance inherent in these VHF transistors eliminates the need for critical neutralization. The use of a fixed neutralization capacitor allows for final alignment without special test equipment.

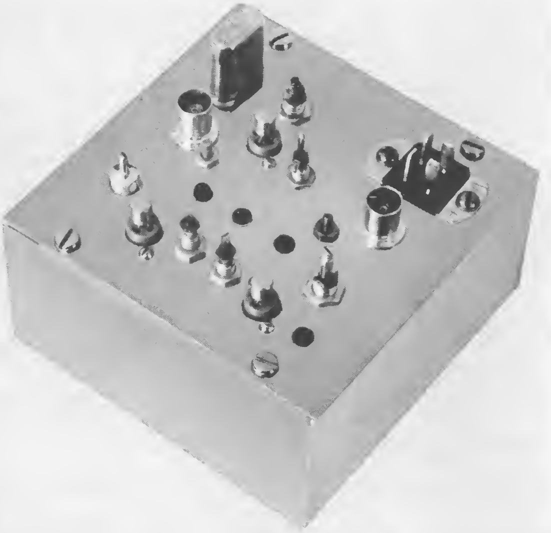

Figure 1: Top view of W2OKO's solid-state two-meter converter showing layout of transistors, crystal, and adjustable coils. Unit measures 4-by-4-by-2 inches.

---

*Commercial Receiving Tube and Semiconductor Division, Somerville, New Jersey

[1] "Nuvistor Two-Meter Converter," RCA Ham Tips Volume 21, No. 2, May, 1961.

"Transistors and Nuvistors in a Two-Meter Transceiver," RCA Ham Tips Volume 25, Numbers 2 and 3, Spring and Summer, 1965.

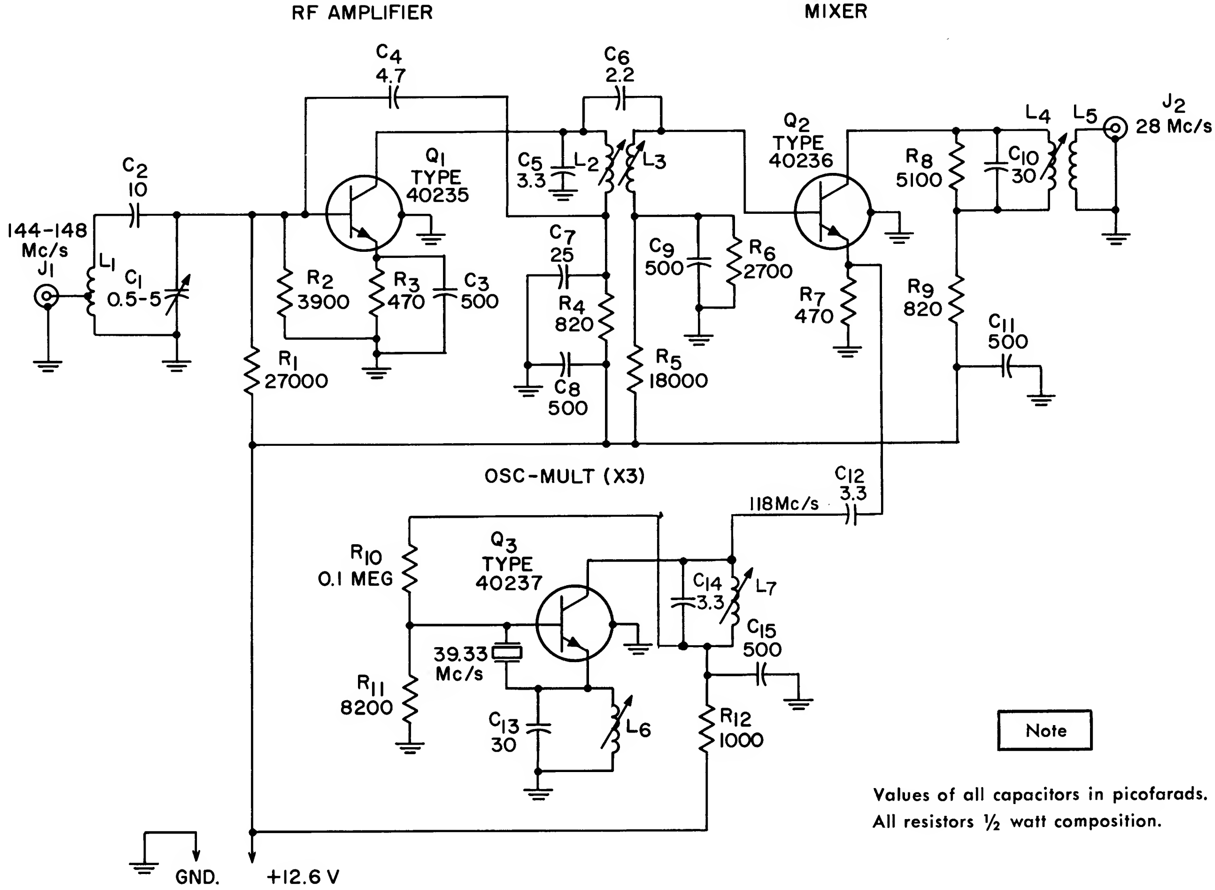

Note

Values of all capacitors in picofarads.
All resistors ½ watt composition.

C_1—0.5-5 pF tubular trimmer (Erie 532-3R or equiv.)
C_2—10 pF ceramic tubular (Centralab TCZ-10 or equiv.)
C_3, C_9, C_{11}—500 pF silver button (Erie 662-003-501K or equiv.)
C_4—4.7 pF ceramic tubular (Centralab TCZ-4R7 or equiv.)
C_5, C_{12}, C_{14}—3.3 pF ceramic tubular (Centralab TCZ-3R3 or equiv.)
C_6—2.2 pF ceramic tubular (Centralab TCZ-2R2 or equiv.)
C_7—25 pF silver button (Erie 662-003-250 or equiv.)
C_8, C_{15}—500 pF ceramic disc (Centralab DD-501 or equiv.)
C_{10}, C_{13}—30 pF ceramic tubular (Centralab TCZ-30 or equiv.)
J_1, J_2—BNC-type coaxial jack
L_1—5 turns, No. 16 bare wire, ¼-inch diameter (spaced wire diameter), tap one turn up from bottom
L_2, L_3—4 turns, No. 26 enamelled wire, close wound on ¼-inch diameter ceramic slug tuned form (Miller 4500 or equiv.)
L_4—11 turns, No. 26 enamelled wire, close wound on ⅜-inch diameter phenolic slug tuned form (Miller 21A000RBI or equiv.)
L_5—3 turns, insulated wire, close wound link
L_6—5 turns, No. 26 enamelled wire, close wound on ⅜-inch diameter phenolic slug tuned form (Miller 21A000RBI or equiv.)
L_7—7 turns, No. 26 enamelled wire, close wound on ¼-inch diameter ceramic slug tuned form (Miller 4500 or equiv.)
R_1—27,000 ohms, ½ watt
R_2—3,900 ohms, ½ watt
R_3, R_7—470 ohms, ½ watt
R_4, R_9—820 ohms, ½ watt
R_5—18,000 ohms, ½ watt
R_6—2,700 ohms, ½ watt
R_8—5,100 ohms, ½ watt
R_{10}—0.1 megohm, ½ watt
R_{11}—8,200 ohms, ½ watt
R_{12}—1,000 ohms, ½ watt

Miscellaneous—2 standoff solder terminals; one power socket (Jones P304AB or equiv.); one crystal, 39.33 Mc/s overtone (International Crystal Company Type FA5 or equiv.); 3 transistor sockets; one crystal socket (National CS-7 or equiv.); one brass plate 4-by-4-by-1/32 inches.

Figure 2: Schematic diagram and parts list of W2OKO's all-transistor two-meter converter.

Construction

A full-scale template (see Figure 3) is included to simplify construction of this converter. If this layout is duplicated, the possibility of trouble is minimized and alignment made less cumbersome.

Good ground conductivity and solderability can be assured by use of a brass or copper plate for the chassis. For ease of tuning, all coils are slug-tuned. Ceramic forms are used for higher frequencies; phenolic forms for lower frequencies.

The oscillator frequency was chosen to provide a converter output of 26 to 30 Mc/s. For operation at a lower IF frequency — such as 14-18 Mc/s — the operator need merely increase the crystal frequency from 39.33 to 43.33 Mc/s, and increase the number of turns in the output coil, L_4, to twenty-two. No changes are necessary in the two oscillator coils, L_6 and L_7.

Alignment

Alignment of this all-transistor, two-meter converter is simple, and doesn't require either a sweep generator or oscilloscope. The complete tuneup can be made with a grid-dip meter and the receiver S-meter. The procedure is as follows:

Using the grid-dip meter, "rough tune" all the coils (L_1, L_2, L_3 to 146 Mc/s; L_4 to 28 Mc/s; L_6 to 40 Mc/s; and L_7 to 118 Mc/s).

Next, connect the converter to the antenna and the receiver and apply power. Optimum supply voltage is 12.6 volts, but a variation of plus or minus one volt will not cause any degradation. A check for correct wiring may be made by comparing voltages with those given in the following table. All voltages are with respect to ground and may vary as much as 20%. Measurements are made with a 20,000-ohms-per-volt meter. Input voltage equals 12.6 volts.

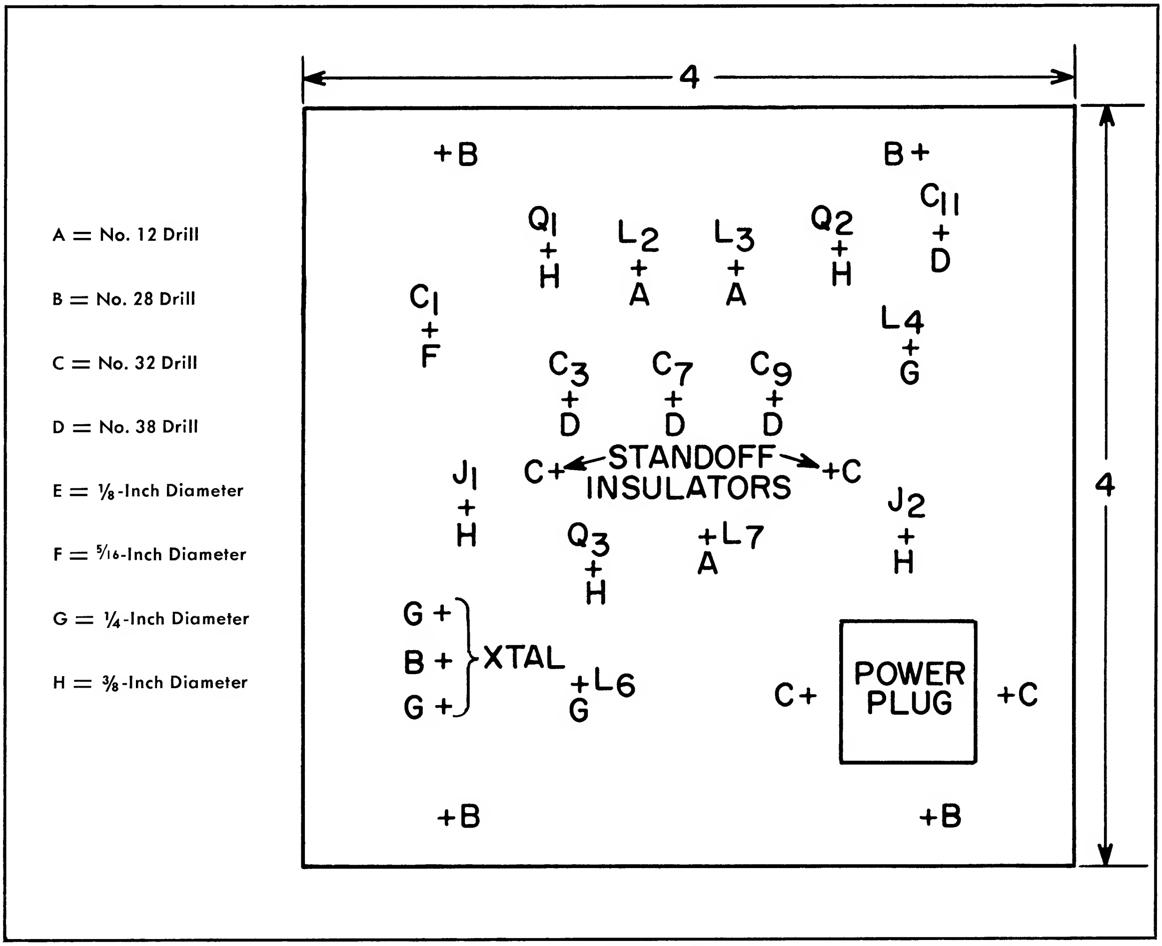

Figure 3: Bottom view of chassis plate as actual-size template. Note that "A" through "H" are drill sizes.

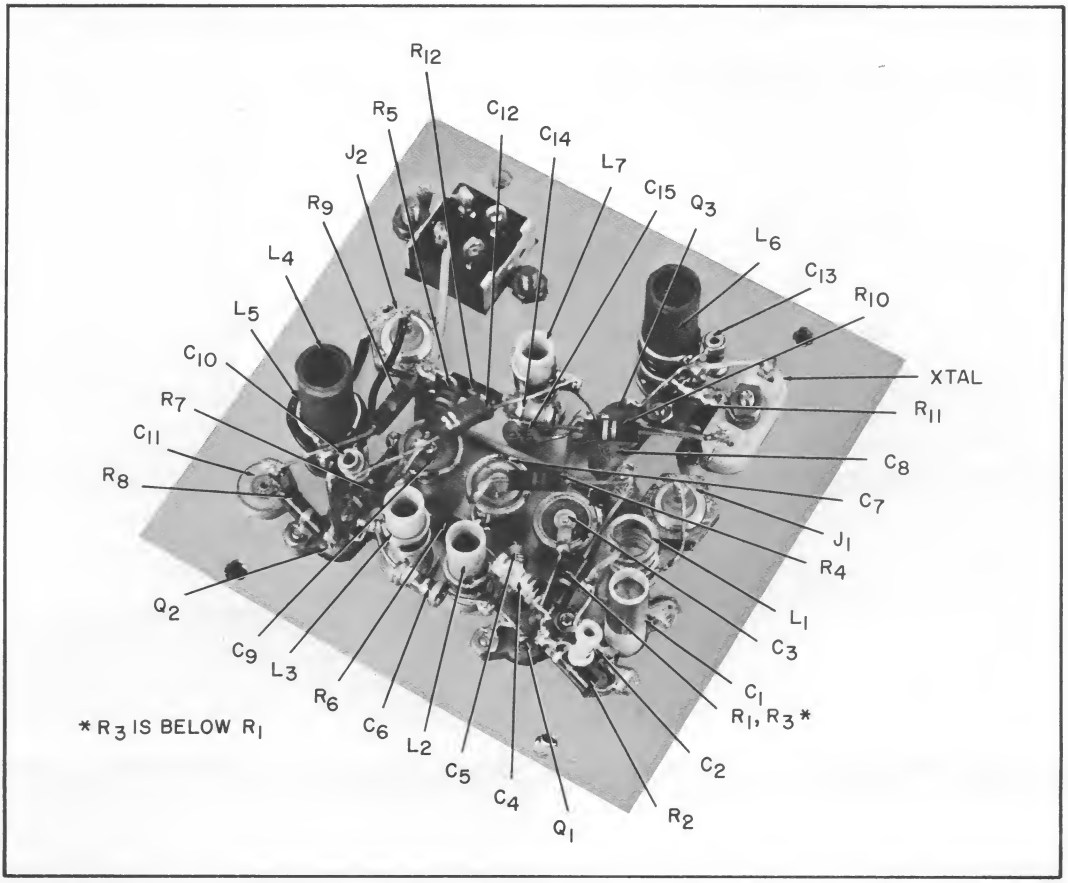

* R3 IS BELOW R1

Figure 4: Bottom view of W2OKO's converter showing wiring of various components. Note that this photo layout can be related to the template diagram shown at left in Figure 3.

TABLE

VOLTAGE	TRANSISTOR TYPES		
	(Q1) 40235	(Q2) 40236	(Q3) 40237
Collector to Ground	11.3 V	11.0 V	5.0 V
Base to Ground	1.3 V	1.4 V	0.6 V
Emitter to Ground	0.65 V	0.8 V	0 V

If the converter is operating properly, two-meter signals should be heard. If these signals are not received, the oscillator should be checked. A drop in background noise when the crystal is removed signifies proper oscillator operation. A slight readjustment of L_6 may be necessary to start oscillation. Tune L_7 for maximum output as read on the receiver S-meter.

Tune in a signal at 145 Mc/s and adjust L_2 for a maximum S-meter reading. Repeat at 147 Mc/s but now tune L_3 for a maximum S-meter reading. With a signal at 146 Mc/s, adjust L_1 for maximum response. This tuning will be broad.

Adjust the tuning of L_4 to give a fairly uniform response across the whole band.

Power Supply

Power for mobile operation is easily obtained directly from the 12.6-volt grounded negative automobile supply.

In the home receiver, there are several sources that may be tapped, four of which are diagramed in Figure 5. If the receiver employed in conjunction with this converter uses a center-tap grounded heater-voltage supply, the circuit shown in Figure 5(A) cannot be used. A careful check of the receiver schematic will be necessary to decide which power source is best suited. In any case, the total power drain is so low that there is no danger of overloading the receiver.

Conclusion

Brief use of this converter will make it quite obvious to the builder that employment of low-cost, VHF-type, RCA transistors at 144 Mc/s is not only very practical but provides benefits well worth any effort expended in construction. Once properly aligned, the unit should give many years of maintenance-free operation.

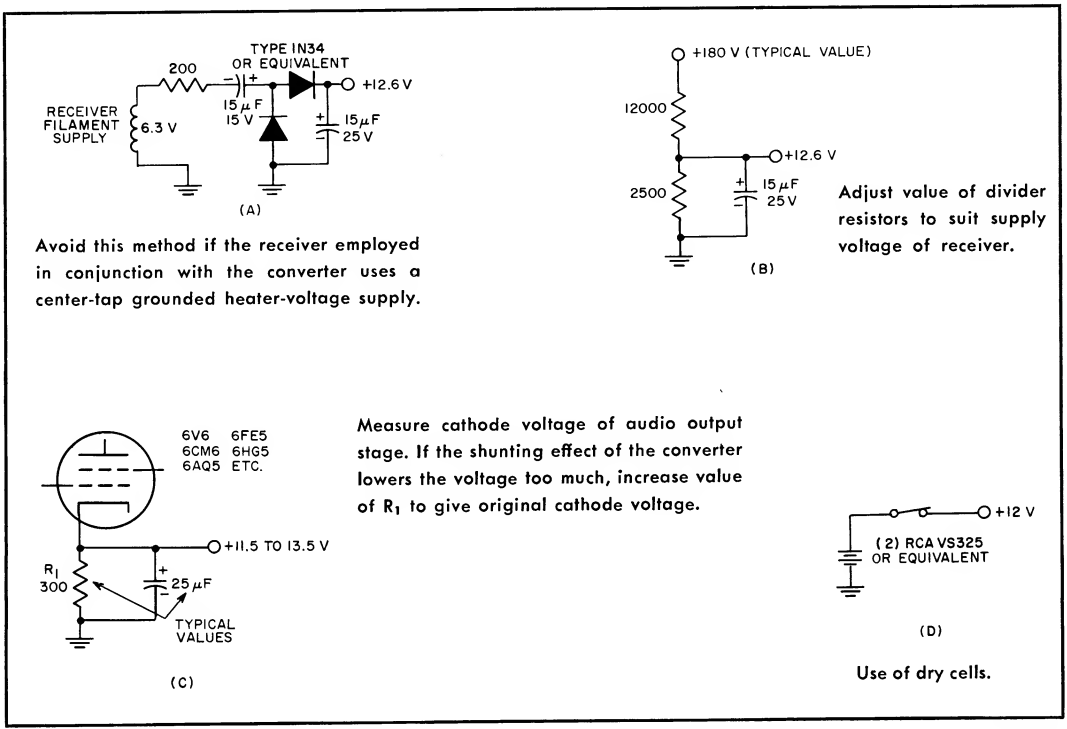

Avoid this method if the receiver employed in conjunction with the converter uses a center-tap grounded heater-voltage supply.

Adjust value of divider resistors to suit supply voltage of receiver.

Measure cathode voltage of audio output stage. If the shunting effect of the converter lowers the voltage too much, increase value of R_1 to give original cathode voltage.

Use of dry cells.

Figure 5: Four alternative methods of obtaining +12.6 volts at 10 milliamperes to operate the W2OKO converter with the home receiver. The author employed Method "C" in the construction of his own particular unit.

RCA Amateur Radio Operator Builds $250 Ground Station To Record Weather Pictures From TIROS Satellites

Weather satellites cost millions to build and launch, but ham radio operators from Moscow to Tanganyika could obtain good weather pictures from space by adding to their receivers such mundane items as a rolling pin, a rubber band, and an argon electric light bulb.

Wendell Anderson, K2RNF, an engineer with the Radio Corporation of America, already has built such a "do-it-yourself" ground station for $250 in the basement of his home, 429 Paul Drive, Moorestown, N. J. — and it works.

Mr. Anderson, who built his receiving station just to prove it could be done, used the system in its original version to obtain weather pictures from the NIMBUS satellite launched back in September, 1964.

Stimulated by his success, the RCA engineer wrote an article about his project which appeared in the November, 1965, issue of "QST" and received that magazine's award for the best article of the month.

Pictures which he obtained on March 2, 1966, from ESSA 2, the twelfth TIROS satellite, resulted in national press and television coverage.

Right now, he's readying his system in anticipation of receiving weather pictures from the new NIMBUS experimental satellite, which is scheduled for an April launch from Vandenberg Air Force Base in California.

RCA HAM TIPS is published by RCA Electronic Components and Devices, Harrison, N.J. It is available free of charge from participating RCA Industrial Distributors. It is also available on a two-year subscription basis ($1 for eight issues to cover costs of handling and mailing). Please make check or money order payable to Radio Corporation of America, and remit to "Radio Corporation of America, Section 882, Harrison, N. J. 07029."

DISTRIBUTED BY
GEORGE D. BARBEY CO., INC.
READING LEBANON
LANCASTER POTTSTOWN

WHEN MAILING
PLACE POSTAGE HERE

READING PA.
U.S. POSTAGE
02 ½
PB METER 314629

BLK. RT.
AD'L. 3/8¢ PD.

Information furnished by the Radio Corporation of America is believed to be accurate and reliable. However, no responsibility is assumed by RCA for its use; nor for any infringements of patents or other rights of third parties which may result from its use. No license is granted by implication or otherwise under any patent or patent rights of RCA.

Indispensable!

The brand-new RCA RC-24 receiving tube manual

Complete–authoritative
A must in every technical library
A must on every work bench
More compact and easier to read than ever before

Technical design and applications data on more than 1200 receiving tubes. Check these NEW features and improvements not included in previous editions:

- ✓ Additional data on 100 new tube types
- ✓ Revised circuits section with new, simple format
- ✓ Updated picture tube characteristics chart
- ✓ Revised and updated Applications Guide
- ✓ New tube index section for ready reference
- ✓ Data section on active types only. (Discontinued and replacement types appear in a separate section.)
- ✓ Additional text material on TV in the tube applications section

Everyone concerned with electronics needs this manual... service technicians, engineers, radio amateurs and hobbyists. Order yours today from your nearest Authorized RCA Distributor.

Only $1.25*
**Suggested Price*

RCA Electronic Components and Devices, Harrison, N.J.

RCA® **The Most Trusted Name in Electronics**

HAM TIPS

A PUBLICATION OF RCA ELECTRONIC COMPONENTS AND DEVICES

VOL. 26, NO. 2 ©1966, RADIO CORPORATION OF AMERICA SPRING, 1966

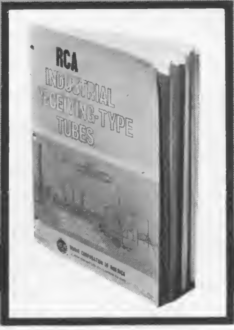

'Special' Tube Types

And the Amateur Radio Operator

By L. W. Aurick, K3QAX/W2QEX*

RCA Electronic Components and Devices

Radio amateurs are experimenters by nature and definition. As experimenters, they possess few inhibitions to trying something new. Many significant contributions to the field of communications have been made by hams who didn't know that something was "impossible."

This inherent enthusiasm for the new and different has made itself felt in the area of electron tubes. In some instances, it has resulted in the development of new tube types expressly for amateur service. Sometimes, however, it has inadvertently fostered the propagation of misleading information.

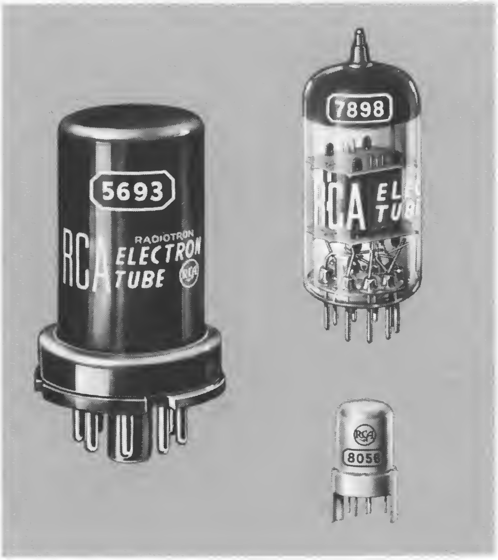

Rumors spread fast in amateur circles, but never so fast as when someone suggests that the "plugging-in" of a new tube will automatically increase power output or sensitivity. Such claims, of course, usually stem from "word-of-mouth" recommendations rather than from reliable published data.

Generally, the choice of a tube type for a particular application involves investigative procedures and precise conclusions that can be made only by an experienced engineer. It is not within the scope of this paper, therefore, to tell the ham how he might assume a highly specialized engineering role. Rather, this discussion is intended to provide the radio amateur with some relevant facts that will help him to better evaluate the many claims and recommendations he encounters. Included in this paper are some of the problems involved in making a selection; and a few clues as to why a local radio-parts distributor may not even have heard of some "special" tube type — let alone stock it.

Proper Tube Selection a Composite Judgment of Many Criteria

In his initial selection of a tube type for a particular application, the professional circuit designer first considers where and how the

---

*Lancaster, Pennsylvania

tube is to be employed. He usually enjoys a relative freedom of choice in this task, because there are frequently several types available which can be expected to perform the required function in a specific application. Beyond this, however, careful consideration must be given numerous other criteria, including initial tube cost, circuit complexity, and circuit reliability.

The initial cost of a tube is always an important criterion in the choice a designer must make. The ultimate selling price of the equipment will bear a direct relationship to this cost. Because cost most often is directly related to reliability, however, it cannot be considered separately but must be included as an integral part of component reliability. Certainly, the intended use of a piece of electronic gear will, in large measure, dictate the reliability required from both the component and the overall system.

What is Reliability?

In simple terms, reliability is a measure of the capability of a given component to perform a specified function for a specified time. Thus, reliability depends on the requirements of the particular application. For example, a tube designed for use in a missile might be required to have a functional life of only one minute, yet demand extremely high performance assurance for that single minute. In this case, reliability would be the prime consideration and the cost secondary.

On the other hand, tubes used in home-entertainment instruments such as television receivers, hi-fi units, and tape recorders can have somewhat less stringent reliability requirements because results of failure are not so serious. While such tubes must perform their particular functions for a reasonable length of time, it is equally important that their initial cost — as well as replacement cost — be reasonable. It is quite possible, however, that entertainment-type tubes might accumulate amazingly long periods of service. (RCA frequently receives reports of old-line home instruments which are still functioning satisfactorily with their original tube complements.)

Receiving-type tubes designed primarily for home-instrument applications are called "commercial" receiving tubes, and those intended for use in communications or industrial equipment are called "industrial" receiving tubes. This paper confines its discussion to three classifications of industrial-receiving tubes known as "premium" types, "mobile-communications" types, and "special red" types.

"Premium" Tubes

Designed especially to meet the requirements of particular military specifications or critical industrial applications, RCA "premium" tubes must pass very rigid environmental tests. These might include tests for shock, vibration, glass strain, microphonics, stability, high altitude, and any other conditions to which they might be subjected in actual use. In applications other than those for which premium tubes are specifically designed, however, there are no guarantees that these industrial types will provide better performance than their commercial counterparts or prototypes.

The popular 12AT7 type, for example, is used in many receiving applications, including mixer, oscillator, and audio stages. In the hope of improving receiver performance, the ham might be tempted to replace this prototype, or original, tube with one of its more sophisticated premium versions. There is a strong possibility that such substitution would result only in disappointment.

To illustrate, among the premium types that might replace the 12AT7 are Military Types 12AT7WA and 12AT7WB.[1] Each of these types was designed to meet an individual military specification, the details of which are not readily available to non-military customers. If even the tubes themselves were available, there is no ironclad assurance that they would perform better, or last longer, in their non-military assignments than the prototype 12AT7. In addition, their cost would be considerably more than the commercial type.

Another premium type which evolved from the 12AT7 is the 6201. This type is physically and electrically similar to the 12AT7, but is subjected to special tests to assure dependable performance under conditions of shock and vibration, and in "on-off" control applications involving long periods of operation in cutoff situations. Although the 6201 undoubtedly could be used as a replacement for the 12AT7 in most applications, the substantial increase

---

[1] The letter designation, "W," following a type number indicates that the type has been tested to a particular military specification. Not all military types, however, carry the "W" designation.
The letter designations, "A," "B," or "C," indicate improved versions of a type that is "unilaterally interchangeable" with all previous versions. For example, type 6L6GB replaces type 6L6G, but this does not necessarily mean that type 6L6G can always be used as a replacement for type 6L6GB. Going a step further, it is also possible that neither of the two latter types would work properly in a 6L6GC socket.

in price would buy few, if any, operational benefits for the average amateur.

"Mobile-Communications" Tubes

As their name implies, "mobile-communications" tubes are those RCA industrial receiving-type tubes which are included in the broad category of types which operate from 3-cell or 6-cell storage batteries or battery charger systems. In this category are the types which function from nominal 6-volt and 12-volt systems.

Mobile-communications types are designed for use in specific applications, and their advantages in such usage do not necessarily extend to other applications. To cite an example, the wider heater-voltage range of mobile-communications tubes (from 10 volts to 15 volts for the 12-volt types) provides no additional capability in amateur receivers which operate from a well-regulated, line-operated AC power supply.

In the RCA line of mobile-communications tubes are two types which are similar to the 12AT7. The 7898, which has slightly higher maximum-plate-voltage and plate-dissipation ratings, is recommended for use with 6-cell (12-volt) storage-battery systems. The 6679/12AT7—a double-branded type[2]—is recommended for 3-cell (6-volt) systems.

"Special-Red" Tubes

Although the four tube types in the RCA "special-red" family are not used in amateur equipment, they should be given mention because of the particular philosophy they represent.

RCA "special-red" tubes signify the ultimate in tube design for circuits that require the highest degree of confidence.

Denoting a special category of "premium" tubes, they are subjected to the most stringent tests and are designed to meet the requirements of critical industrial and military applications where long life, extreme dependability, and exceptional stability are paramount. Carrying a warranty for 10,000-hour life (approximately two years), these tubes have been given a distinguishing red color on their bases and metal-envelope shells — hence the name, "special-red." All are octal-based types.

The 5690 is a full-wave vacuum rectifier each section of which has an independent heater and cathode. This type is rated for service at altitudes up to 60,000 feet.

The "special-red" types 5691, 5692, and 5693 are similar to the 6SL7-GT, the 6SN7-GT, and the 6SJ7, respectively — three commercial-receiving tube types with which the average ham is well acquainted.

The Cost Differential

Although many of the differences between industrial receiving-type tubes and their commercial counterparts and prototypes may appear to be minor, the former require refinements in design, testing, or manufacturing which usually make higher selling prices mandatory. In some instances, for example, the structures of the tubes might have to be strengthened to assure reliable service in "ruggedized" military or industrial equipment. In other instances, tubes might have to undergo an extensive series of special tests to assure close control of certain characteristics. Such procedures inevitably contribute to higher manufacturing costs, and thus result in higher prices for all users.

Whether or not the additional advantages offered by a "special" industrial tube type offset its higher price is a decision that the individual amateur radio operator must make in the light of his own equipment, operating objectives, and pocketbook.

Conclusion

As stated previously, the professional circuit designer selects a particular tube type for his equipment only after careful evaluation of numerous criteria, including specific function, cost, reliability, and circuit complexity. In the long run, the amateur radio operator should find it beneficial to follow a similar approach to tube selection.

Despite the fact that an individual might be willing to pay a higher price for a "better" tube, there is no justification for assuming that the use of such a tube will automatically improve the performance of a given circuit.

If the amateur is satisfied with the performance of his equipment, the most logical way to maintain this stable performance is by replacing worn-out tubes with new ones bearing the same number in either original, double-branded, or improved "A" and "B" versions.

While substitution of these later versions for worn-out prototypes may not always help the individual situation, it will not hurt it either.

---

[2] A double-branded tube can be used to replace those tubes bearing the individual brand numbers. As this interchangeability is "unilateral," the individual types do not necessarily replace the double-branded type.

300 WATTS–*OUT!*

...any band, 160 to 1¼

The RCA-8122 has power and reliability that's *hard to beat*—more than 50% greater dissipation capability than older tubes of comparable size. Used in the latest commercial equipment, or in your own project, the RCA-8122 can deliver power and efficiency with as little as 5 watts drive.

This low-cost forced-air-cooled beam power tube is designed with the builder in mind.... Use it with coaxial, strip-line, or conventional lumped tank circuit construction. Get broad-band neutralization on upper frequencies with only a series-tuned capacitor in one cathode lead. Ceramic-and-metal construction and special electrode configuration eliminate mechanically-caused noise and provide extreme sturdiness even at high operating temperatures.

Whether you're planning to buy or build, make sure you take advantage of the latest advances in tube technology with the RCA-8122—made by the people who gave you the 6146. On the amateur bands, it's years ahead!

• Full ratings up to 500 MHz (CCS) • 380 Watts PEP out at 30 MHz • 300 Watts CW out at 470 MHz • Heater 13.5± 10%, 1.3A • Approximate 5 Watts drive for 300 Watts out CCS

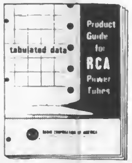

"Product Guide for RCA Power Tubes" (PWR-506A) gives you tabulated data of technical information on specific tube types. Ask your RCA Industrial Tube Distributor for a copy.

AVAILABLE THROUGH YOUR AUTHORIZED RCA INDUSTRIAL TUBE DISTRIBUTOR

RCA The Most Trusted Name in Electronics

RCA HAM TIPS is published by RCA Electronic Components and Devices, Harrison, N.J. It is available free of charge from participating RCA Industrial Distributors. It is also available on a two-year subscription basis ($1 for eight issues to cover costs of handling and mailing). Please make check or money order payable to Radio Corporation of America, and remit to "Radio Corporation of America, Section 882, Harrison, N. J. 07029."

DISTRIBUTED BY
GEORGE D. BARBEY CO., INC.
READING LEBANON
LANCASTER POTTSTOWN

BLK. RT.
AD'L. 3/8¢ PD.

WHEN MAILING
PLACE POSTAGE HERE

READING PA.
U.S. POSTAGE
02½
PB METER 314629

HAM TIPS

A PUBLICATION OF RCA ELECTRONIC COMPONENTS AND DEVICES

VOL. 26, NO. 3

SUMMER, 1966

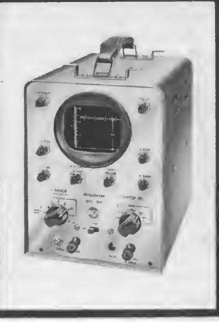

1/2/66

RF 'Sample-Box' for 'Scope Monitoring Of Amateur Transmitter Output

By J. F. Sterner, W2GQK*

RCA Electronic Components and Devices

Several years ago, W2GQK co-authored an article on adaptation of the RCA WO-33A 3-Inch Oscilloscope for use as "An RF Modulation Monitor" (RCA Ham Tips, Volume 20, No. 3, September, 1960). Since that time, a steadily mounting interest in frequency ranges above 50 MHz has suggested the need for a more simplified and versatile method of RF modulation monitoring that would eliminate "haywire," be more adaptable to higher frequencies, and prove more usable among oscilloscopes in general. The amateur radio operator is now offered such a device in the "sample-box" discussed by W2GQK in the following article. Of simple, straightforward construction, the sample-box requires a minimum of space and is readily affixed to the outer rear section of the oscilloscope case to become a permanent part of the instrument.

General Description

The sample-box is designed as an addition to the outer rear section of the oscilloscope case, as shown in Figure 1, to permit "looping through" of the antenna signal. A small sample of the RF voltage is coupled from the "looping-through" circuit to a capacitor voltage divider. A variable shunt capacitor is used at the bottom of the divider so that the RF signal to be applied to the vertical-deflection ("V") plates of the oscilloscope tube may be adjusted to the desired level.

Addition of the sample-box to the author's 52-ohm antenna transmission-line system has caused no noticeable change in VSWR, even at 144 MHz.

Although the application described in this article makes specific reference to the WO-33A oscilloscope, the sample-box may be attached to any general-purpose 3-inch or 5-inch instrument. Many oscilloscopes (such as the RCA 5-inch WO-91B, for example) even have jacks on the back of their casing for direct connection to the CRT deflection plates. This provision, of course, simplifies the hookup and merely requires that the sample-box be connected to the "V"-plate terminals.

In the author's experience, application of the RF signal to the "V" plates in a "single-ended" manner appears to render best results. If the sample-box is used with 'scopes that have both "V"-plate connections accessible, one of the plates must be grounded for RF as shown at P_2 in Figure 2. In addition, this "V"-plate connection should be isolated for DC by means of a capacitor. If it is not, a 0.001-microfarad, 1,000-volt capacitor should be inserted between P_2 and J_4 to prevent

---

*Electronic Instruments Operations, Harrison, N. J.

Figure 1: Rear section of WO-33A oscilloscope case with W2GQK's RF sample-box mounted and connected.

shorting of the oscilloscope circuitry.

It should be noted that the normal gain performance of the 'scope's internal "V" amplifier is reduced when the sample-box is connected to the deflection plate. The oscilloscope can be restored to original operating performance for other use by merely unplugging the two phono-type plugs from the sample-box.

Construction

The builder is advised to follow closely the layout and assembly configurations shown in Figures 3 and 4. Length of the leads from J_3 and J_4 to the "V"-plate connections should not exceed 5 inches. A suggested step-by-step procedure for construction of the sample-box is as follows:

1. Drill all holes designated on the Mini-

Values of C_1 and C_2 to be Selected For Different Transmitter Power Outputs

Transmitter Power Output	C_1	C_2
Up to 5 Watts	15 pF	3-35 pF (Arco #403 or equiv.)
5 to 100 Watts	10 pF	7-100 pF (Arco #423 or equiv.)
100 to 1,000 Watts	10 pF	25-280 pF (Arco #464 or equiv.)

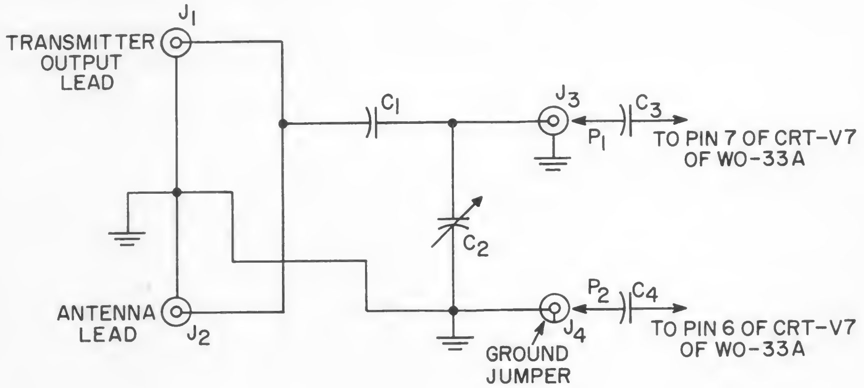

C_1 — Mica or ceramic (Select appropriate value for power of your transmitter from accompanying table.)

C_2 — Mica or ceramic (Select appropriate value for power of your transmitter from accompanying table.)

C_3 — 270 pF mica, 600 V ±10%

C_4 — 0.001 μF ceramic disc, 1,000 V ±20%

J_1, J_2 — Type SO-239 coaxial chassis fittings

J_3, J_4 — RCA-type phono jacks

P_1, P_2 — RCA-type phono plugs

Miscellaneous — One Minibox (2¾ by 2⅛ x 1⅝ inches); eight 4-40 by ⅜-inch pan head screws; eight 4-40 nuts; eight #4 T.T. lockwashers; one terminal connector; one Type-52B Cinch terminal strip; two #6 by ¼-inch sheet metal screws; and one socket punch for ⅝-inch holes.

Figure 2: Schematic diagram and parts list of W2GQK's RF sample-box.

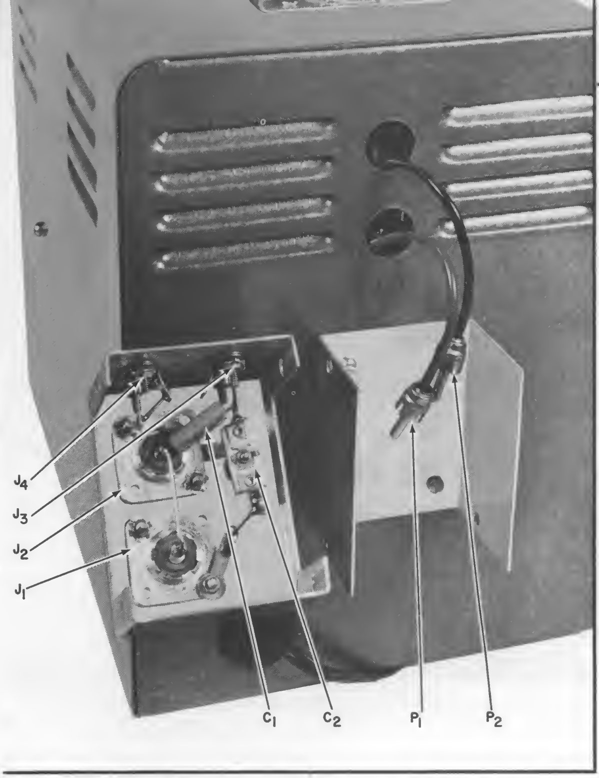

Figure 3: Open halves of RF sample-box showing wiring and mounting detail.

box and assemble the parts. During assembly, make certain that the adjusting screw at C_2 lines up with the "Adj." hole (Figure 4).

2. Remove the side and bottom screws from the case of the oscilloscope and slide out the oscilloscope chassis. (The WO-33A oscilloscope has two S.T. screws on each side and four on the bottom.)

3. Using Figure 3 as a reference, locate the proposed positions on the rear of the oscilloscope case for the two mounting screws (#6 S.T.) of the sample-box. After drilling and punching the 5/8-inch holes, attach the bottom half of the sample-box to the case, making certain that the screws will not short out any components of the chassis. Then attach the "snap-on" top portion.

4. Mount the terminal strip on the oscilloscope chassis to the left of the CRT, as shown in Figure 4. Connect the 270-picofarad and 0.001-microfarad capacitors on the terminal board to CRT socket pins 7 and 6. Then connect the two 5-inch leads to the terminal board.

5. Replace the oscilloscope chassis in its

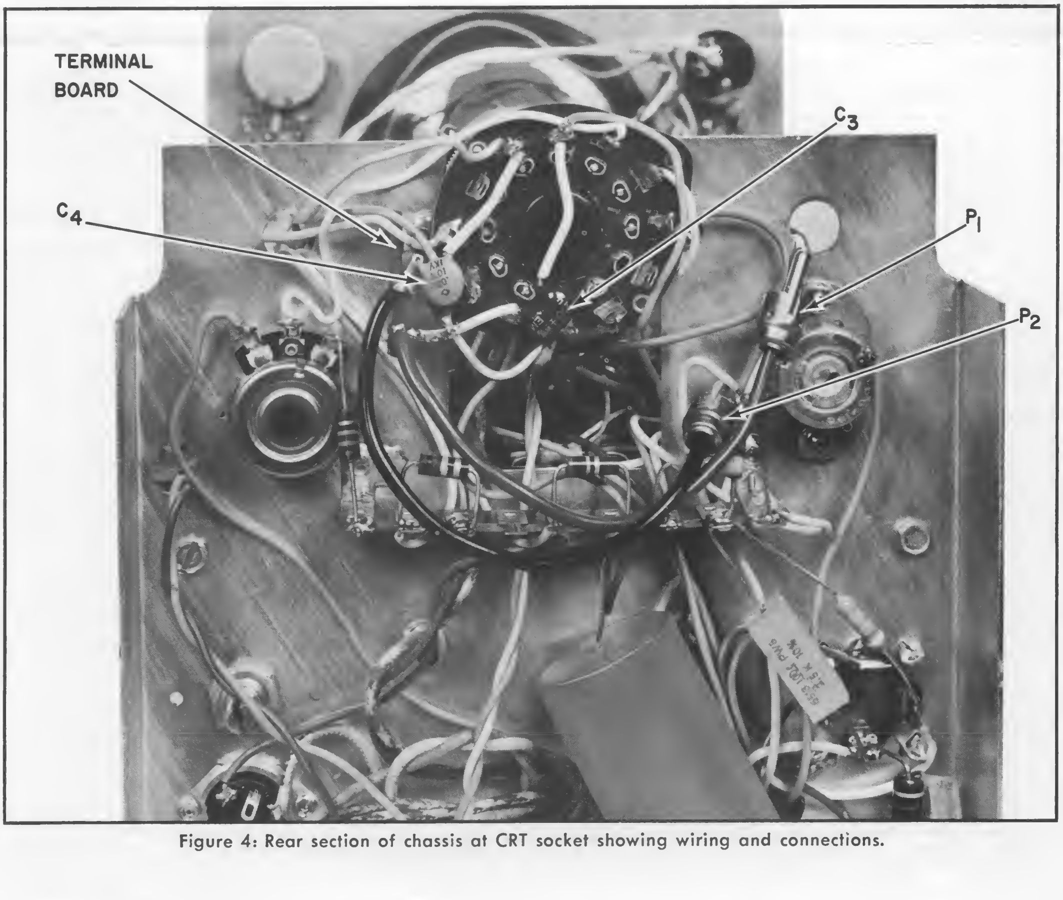

Figure 4: Rear section of chassis at CRT socket showing wiring and connections.

RCA HAM TIPS is published by RCA Electronic Components and Devices, Harrison, N. J. It is available free of charge from participating RCA Industrial Distributors. It is also available on a two-year subscription basis ($1 for eight issues to cover costs of handling and mailing). Please make check or money order payable to Radio Corporation of America, and remit to "Radio Corporation of America, Section 882, Harrison, N. J. 07029."

case and bring the two 5-inch leads out through the rear holes. Solder a phono plug to each lead and insert the plugs into J_3 and J_4.

Connections and Operation On 50- or 75-Ohm Coaxial Antenna Feed System

- **Modulation Envelope Display Connections (AM).** Connect a length of coaxial cable between the transmitter output and J_1. This cable should have the same impedance as the antenna lead. Next, connect the antenna lead to J_2. Turn on the 'scope and set the "H/Sweep Selector" control to the LINE position. Adjust the horizontal line trace to a width of approximately 2 inches at the center of the CRT screen. Tune up the set for normal transmitting-load conditions. Adjust C_1 for a bar-type trace about 1 inch in height (no modulation). During modulation, the peaks should increase to a height of approximately 2 inches. (For further details and explanation of this type of pattern, the reader is referred to the ARRL Handbook and other similar publications.)

- **Trapezoidal Pattern Display Connections (AM).** In addition to sampling the RF output of the transmitter, the user must sample some of the audio signal from the modulator. The audio is used to provide horizontal deflection of the CRT beam and is applied between the "Ext Sync/H input" terminals of the 'scope. Because of the high gain of the 'scope "H" amplifier, however, shielded wire should be used for these connections. In addition, the "H/Sweep Sel" switch must be turned to the "H" input position. A typical adjustment procedure might be as follows:

1. Set the "H-Gain" control to minimum.
2. Turn on the transmitter and adjust the trace for a vertical line measuring 1 inch.
3. Modulate the transmitter while slowly advancing the "H-Gain" control, noting the formation of the trapezoidal pattern. (For additional information and analyses of trapezoidal patterns, the reader is referred to the ARRL Handbook and corresponding publications.)

Conclusion

Although connections for monitoring an SSB transmitter may vary widely from unit to unit, the basic principle of monitoring the RF power output remains the same in practically all cases.

The RF sample-box, it should be emphasized, offers a reliable and efficient means for connecting the RF signal of the transmitter to the "V" plates of an oscilloscope without encountering "haywire."

It follows, therefore, that in the various systems detailed in amateur radio handbooks, the sample-box can replace pickup loops and the like. This added benefit should greatly enhance the appeal and value of this device for most hams.

HAM TIPS

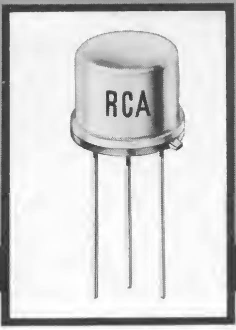

A PUBLICATION OF RCA ELECTRONIC COMPONENTS AND DEVICES

VOL. 26, NO. 4 FALL, 1966

A Solid-State A-M Transmitter For Two-Meter Operation

By D. W. Nelson, WB2EGZ*

RCA Defense Electronic Products

With the advent of RCA "overlay" technology, the useful power and frequency of silicon transistors have been extended to ranges earlier thought unattainable. Today's devices can provide a minimum of 15 watts of output power at 400 MHz. Transistors that can handle 5 watts at 1 GHz should be on the market in 1967. Simultaneously, continual refinements in development and manufacturing have brought these transistors within reach of the amateur's purse. In the following article, WB2EGZ describes the use of the moderately priced RCA-40290 "overlay" transistor in conjunction with several other transistor types in a 2-meter A-M transmitter having more than 1.5 watts of output power. Over-all cost of the transistor complement is about $20. Although WB2EGZ's transmitter design is most suitable for amateur application, and its construction poses an interesting challenge to the able craftsman, the project is not recommended for the inexperienced builder.

Circuit Description

Figure 1 shows the circuit schematic for this solid-state transmitter. The first three RF stages use silicon diffused transistors. An RCA type 40080 is used for the 72-MHz oscillator stage. The transistor for the second stage, a doubler, is an RCA type 40404 operating, in this case, class A. Although, traditionally, a doubler operates class C, the class C circuit appeared to load the oscillator too much and was unstable during variations in supply voltage. The class A circuit not only eliminates the need for a buffer stage, but provides higher output. The third stage, another 40404 transistor, operates class C as the first 144-MHz driver.

The second driver and the final stage of this transmitter employ "overlay" transistors to provide greater gain. The RCA type 40290, which is used for both stages, is a variation of the RCA type 2N3553 particularly suited for AM systems using low voltage (12-15 volt) power supplies. The 2N3553 would be a good alternate in this circuit, but may have lower power output.

Modulation is provided by six inexpensive RCA silicon transistors in a novel circuit arrangement which has negative feedback for improved audio quality. Direct coupling of the stages improves the efficiency of the amplifier while helping to reduce its cost.

Design Considerations

In a transistorized RF amplifier, one of the greatest problems is that of obtaining an optimum power transfer from one stage to the

---

*Central Engineering, Camden, New Jersey

next. Because of the relatively low gain of the transistors, closer coupling is required for greater power transfer. Unfortunately, the higher efficiency associated with close coupling also results in a wider bandwidth and poorer filtering of the harmonics. Another disadvantage of a close coupling technique is the lack of a "tank" tuned circuit for dipping a Grid Dip Oscillator. Thus a compromise coupling is desirable.

A 72-MHz crystal which operates at the fifth harmonic of its basic frequency helps to reduce the number of troublesome harmonics which are present. A compromise in power was made by the use of a high-Q tank for the output of the doubler, and an inductive coupling to the first driver stage. The double tank used in the output of the final stage provides good coupling and the means of "dipping" to the correct frequency. It is also more effective in filtering the sub-harmonics which are present in this type of circuit.

In an earlier design, a 48-MHz crystal oscillator, followed by a tripler, was considered because the crystals are readily available. However, the channel-10 TV interference which resulted proved the circuit to be a poor one.

Some designers dislike the use of an overtone crystal as a frequency source in a transmitter; however, in recent years this application of the device has found wider acceptance. These crystals, which are ground flat, may be excited in the odd harmonics (3rd, 5th, 7th) of the basic frequency by the use of a high-Q circuit tuned to the desired harmonic. The principal disadvantage of an overtone crystal is the low power level at which it must be driven. If the crystal is overdriven to produce the desired output, spurious outputs at slightly higher than the desired frequency will occur. Also, a frequency shift, sometimes permanent, may result. Obviously, either condition is undesirable. However, sufficient amplification, provided by an additional amplifier, avoids these difficulties and establishes the overtone crystal oscillator as a desirable frequency/power source.

Modulation of a transistorized transmitter differs in several ways from that of the normal tube transmitter. These differences are a result of the low gain of the transistor at very high frequencies. In a transistor circuit, the RF power delivered by the driver stage to the final amplifier stage is a significant portion of the total power output of the transmitter — perhaps 10% to 20%. For this reason, 100% modulation may not be possible without modulation of the driver stage. In higher-power transmitters, more than one driver will be modulated. Besides the advantage of higher total modulation, modulation of the driver allows it to be operated at a lower quiescent value and thereby reduces its average dissipation.

In this transmitter, the modulation is switched to the driver stage by diodes arranged so that the driver always peaks in a positive direction. This technique has been found very useful in assuring upward modulation.

Transistor Cooling Considerations

The power rating of a transistor or diode is based on the maximum safe operating temperature of the semiconductor junction. In all power applications, transistors must be properly cooled by conduction of heat away from the junctions. In this transmitter, cooling of the RF final stage is provided by a special heat sink; cooling of the modulator output transistors is effectively provided by the brass chassis. Thermal conductivity from the transistor to the heat sink is improved by the application of a thermal compound, such as silicone grease. Figure 2 illustrates how the modulator output transistors are insulated from the chassis by means of a mica spacer and two nylon feed-through washers supplied with the transistor. Although silicon semiconductors can withstand higher temperatures than germanium types, *it cannot be stressed too strongly that heat sinks and a thermal compound must be used to achieve long life in power transistors.*

Furthermore, transistors are easily destroyed by momentary overloads; *therefore, connections should be double-checked before the transistors are inserted in the sockets.* Also, remember that *transistors should never be inserted or removed when the power is on.*

If, for some reason, a stage is unstable and oscillates, the transistor may become overheated. It is wise, therefore, to keep a receiver turned on while experimenting with the transmitter. If a stage breaks into oscillation, noise will be heard over a wide band on the receiver. At this point, turn off the transmitter, correct the problem, and be sure that the transistors are reasonably cool before applying power again.

Construction

The entire transmitter is assembled on a sheet of brass measuring 5 inches by 9½ inches. This is later mounted on an inverted

5-by-9½-by-2-inch chassis as shown in Figure 3. Figures 4 and 6 show the top and bottom views, respectively, of the assembled transmitter. Although the brass sheet has been silver-plated for enhanced electrical conductivity, the transmitter should operate satisfactorily without the plating. Those who prefer to silver-plate the brass sheet can obtain a practical-type compound from Cool-Amp Company, Portland, Ore. The chassis layout provided to full scale in Figure 5 is strongly recommended. No attempt has been made to compress the size of the transmitter. Leave the task of miniaturization to the professionals.

Transistor sockets have been used, except with the audio power units, to eliminate the danger of overheating the leads when soldering. The use of sockets also facilitates replacement of the transistors when necessary. Although small Augat sockets were used for the author's circuit, these may be replaced by the TO-5 sockets without sacrificing efficiency. TO-5 sockets were used on the breadboard and are somewhat easier to solder.

The greatest single cause of poor transmitter efficiency is ineffective bypassing. The best bypass capacitors are feed-through types having a ferrite filtering element. An improvement over the single bypass element may be obtained by the use of a second capacitor having a different value. Ceramic disc capacitors are effective in bypassing and have been used wherever practical to reduce cost.

Alignment

The suggested steps for alignment are as follows:

1. With the RF transistors secured in their

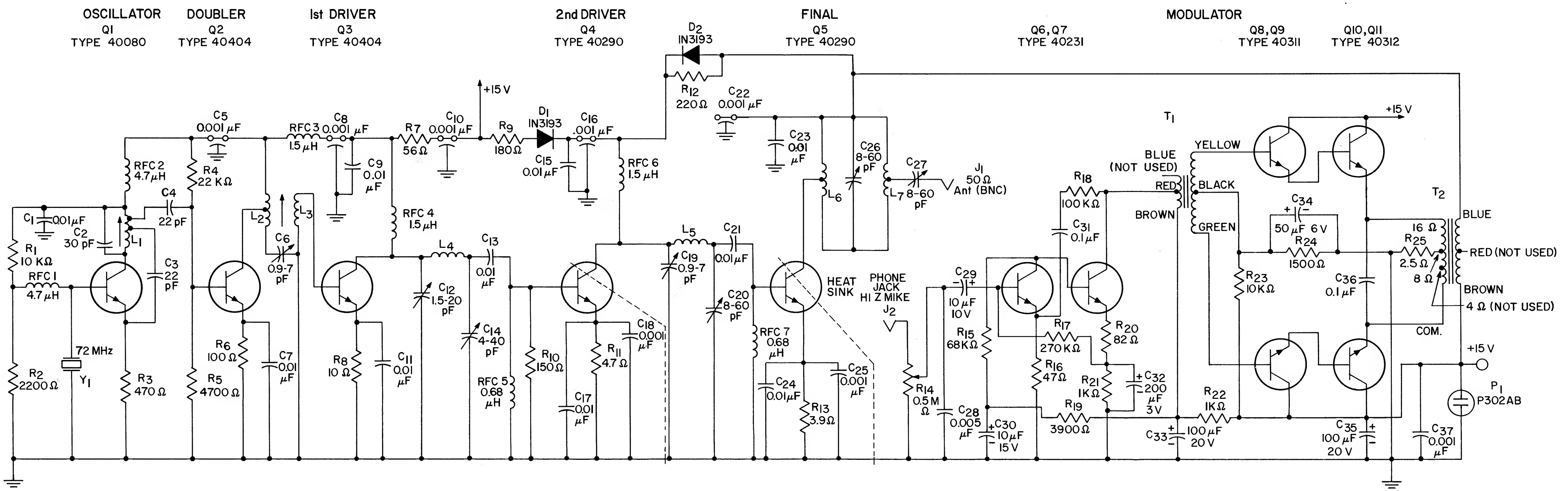

C_1, C_7, C_9, C_{11}, C_{13}, C_{15}, C_{17}, C_{21}, C_{23}, C_{24} — 0.01 µF, 50 volt, ceramic disc
C_2 — 30 pF, mica
C_3, C_4 — 22 pF, mica
C_5, C_8, C_{10}, C_{16}, C_{22} — 0.001 µF Filtercon or equiv.
C_6, C_{19} — 0.9-7 pF mica variable (Arco 400 or equiv.)
C_{12} — 1.5-20 pF mica variable (Arco 402 or equiv.)
C_{14} — 4-40 pF mica variable (Arco 403 or equiv.)
C_{18}, C_{25}, C_{37} — 0.001 µF, 50 volt, ceramic disc
C_{20}, C_{26}, C_{27} — 8-60 pF mica variable (Arco 404 or equiv.)
C_{28} — 0.005 µF, 50 volt, ceramic disc
C_{29} — 10 µF, 10 volt Tantalum or equiv.
C_{30} — 10 µF, 15 volt Tantalum or equiv.
C_{31}, C_{36} — 0.1 µF, 100 volt, paper
C_{32} — 200 µF, 3 volt Tantalum or equiv.
C_{33}, C_{35} — 100 µF, 20 volt Tantalum or equiv.
C_{34} — 50 µF, 6 volt Tantalum or equiv.
L_1 — 4 turns, No. 18 wire, tapped ½ turn and 1 turn from cold end, wound on ¼-inch ceramic form, Green Core
L_2 — 4 turns, No. 22 wire, tapped 1 turn from hot end, wound on ¼-inch ceramic form, White Core
L_3 — 2 turns, No. 22 wire on same form as L_2, close to brass chassis
L_4, L_5 — 3 turns, No. 16 wire, ¼-inch inside diameter
L_6 — 4 turns, No. 16 wire, tapped 1½ turns from cold end, ¼-inch inside diameter
L_7 — 4 turns, No. 16 wire, tapped 1¾ turns from cold end, ¼-inch inside diameter
RFC_1, RFC_2 — 4.7 µH choke
RFC_3, RFC_4, RFC_6 — 1.5 µH choke
RFC_5, RFC_7 — 0.68 µH choke
R_1 — 10 kilohms, ¼ watt
R_2 — 2,200 ohms, ¼ watt
R_3 — 470 ohms, ¼ watt
R_4 — 22 kilohms, ¼ watt
R_5 — 4,700 ohms, ¼ watt
R_6 — 100 ohms, ¼ watt
R_7 — 56 ohms, ½ watt
R_8 — 10 ohms, ¼ watt
R_9 — 180 ohms, ½ watt
R_{10} — 150 ohms, ¼ watt
R_{11} — 4.7 ohms, ½ watt
R_{12} — 220 ohms, ½ watt
R_{13} — 3.9 ohms, ½ watt
R_{14} — 0.5 megohm potentiometer
R_{15} — 68 kilohms, ¼ watt
R_{16} — 47 ohms, ¼ watt
R_{17} — 270 kilohms, ¼ watt
R_{18} — 100 kilohms, ¼ watt
R_{19} — 3,900 ohms, ½ watt
R_{20} — 82 ohms, ¼ watt
R_{21} — 1,000 ohms, ¼ watt
R_{22} — 1,000 ohms, ½ watt
R_{23} — 10 kilohms, ½ watt
R_{24} — 1,500 ohms, ½ watt
R_{25} — 2.5 ohms, 3 watts, wire-wound
T_1 — Stancor TA31 or equiv.
T_2 — Stancor TA56 or equiv.
Y_1 — 72 MHz crystal, International Crystal Type FA5, or equiv.
Miscellaneous — 4 transistor sockets (Augat 8060-1G5 or equiv.); 5 transistor sockets (Elco 05-3301 or equiv.); 1 heat sink (Thermalloy 2207-PR10 or equiv.); 1 aluminum chassis (5 by 9½ by 2 inches); 1 brass plate (5 by 9½ by 1/16 inches); 1 crystal socket (Elco 04-210-04 or equiv.); 1 BNC connector; 1 phone jack; 1 connector (Cinch-Jones P302AB or equiv.)

Note: All resistor power ratings are recommended minimum values.

Figure 1: Schematic diagram and parts list of the WB2EGZ solid-state A-M transmitter for two-meter operation.

Note 1: 0.002-inch mica insulator
Note 2: Remove burrs from chassis holes

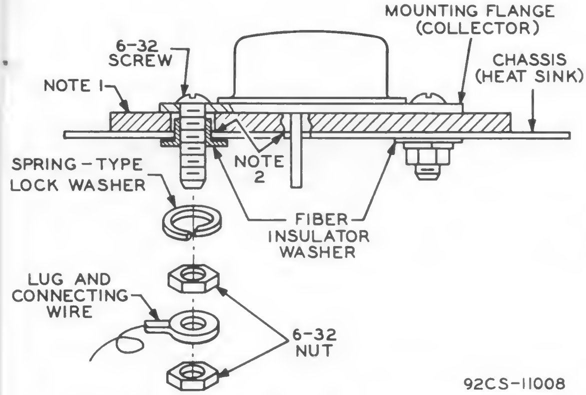

Figure 2: Method for mounting AF power transistors in the WB2EGZ solid-state transmitter.

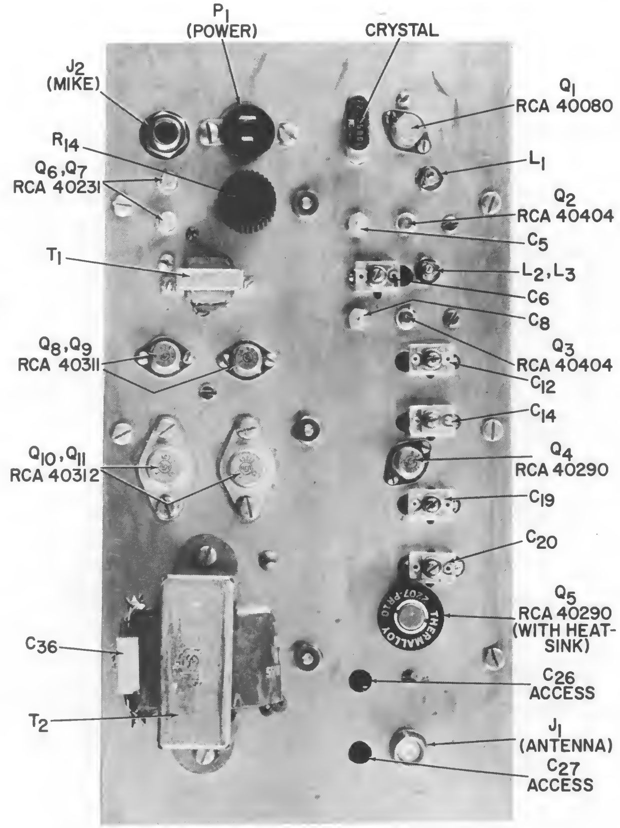

Figure 4: Top view of transmitter.

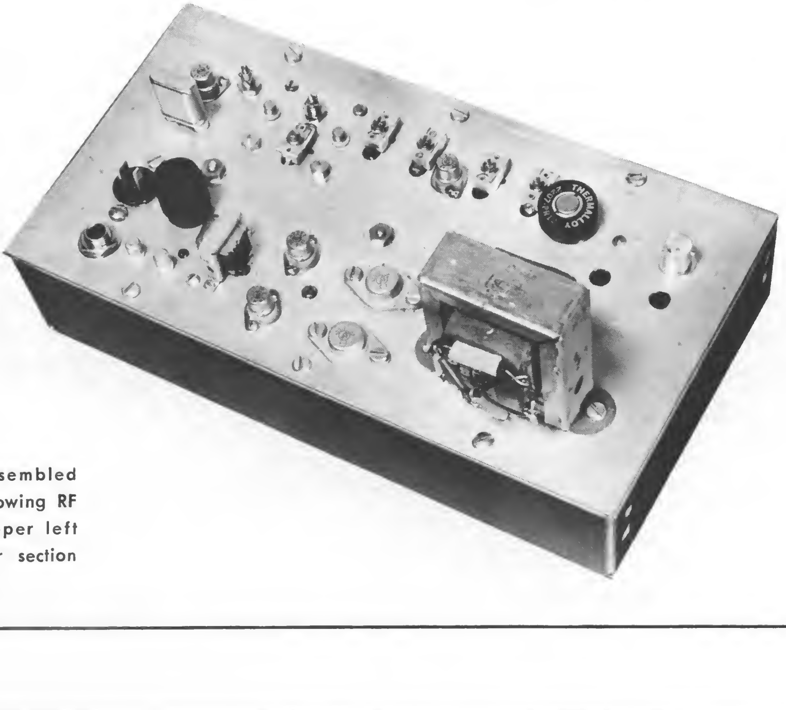

Figure 3: Assembled transmitter, showing RF section at upper left and modulator section at lower right.

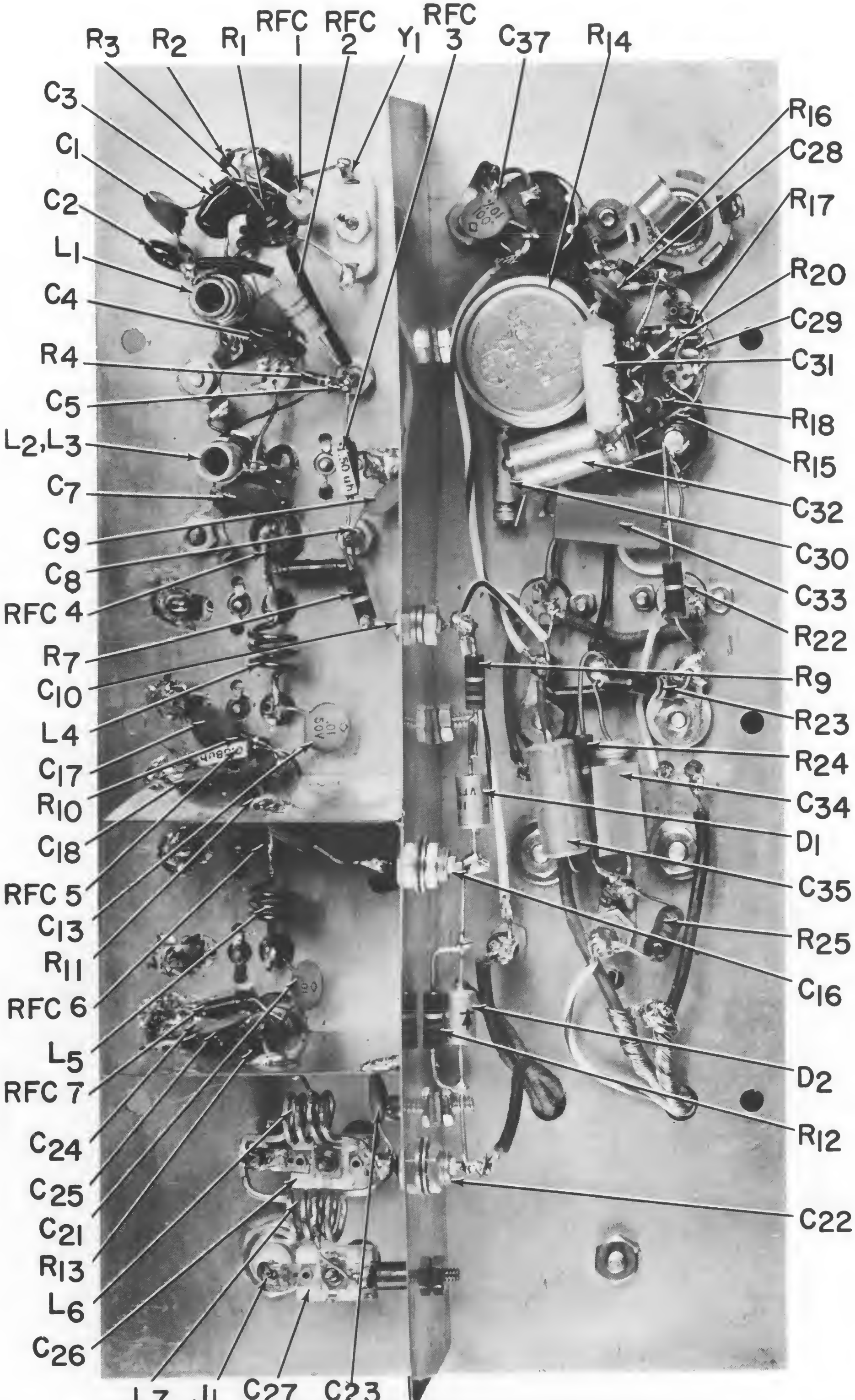

Figure 6: Bottom view of transmitter, showing RF section above and modulator section below.

sockets and the power off, tune the oscillator, doubler, and final tank circuits to their respective frequencies.

2. Remove the 40290's, apply power, and tune the first three stages for a maximum current flow by measuring the voltage drop across the 56-ohm resistor (R_7). This reading should be about 2.0 volts. At this moment, the signal heard on your receiver should be very strong.

3. Next, connect the output of the transmitter to an appropriate 50-ohm load and insert the 40290 transistors, remembering that power must be off when inserting or removing transistors. Assuming that the circuit is stable when the power is turned on, the pi networks may be tuned for maximum output. Several combinations of capacitor settings may give good output, so look for the best combinations of tuning. Retuning the oscillator and buffer may be helpful. If any stage is unstable, oscillations will be detected on the receiver. Retuning will usually correct this instability. Another indication of improper tuning (or some other difficulty) is a very abrupt change in output when tuning. It may be necessary to tune one stage at a time for maximum collector current before optimizing the power output. Unmodulated power output should be 1½ to 2 watts.

4. Before proceeding with the alignment, proper operation of the modulator should be verified. Disconnect the RF side of the modulation transformer and connect a 100-ohm, 1-watt resistor across it. Using an oscilloscope and an audio generator, check the waveform for a 28-V p-p output without distortion. If clipping or distortion occurs at this level, the bias voltage for the power stage should be adjusted for the best sinusoidal pattern by changing the value of R_{24}.

To tune the transmitter for best modulation, it is necessary to monitor the signal with an oscilloscope. One way to accomplish this is by using the technique employed by W2GQK ("RF 'Sample-Box' for 'Scope Monitoring of Amateur Transmitter Output" — Ham Tips, Vol. 26, No. 3, Summer, 1966). As the latter method appeared subsequent to the author's completion of the transmitter, the technique used in this instance was to connect the vertical input of the 'scope across the output of the final IF stage in the receiver (see Figure 7). The RF envelope of the transmitter may now be viewed.

5. With the modulator connected to the transmitter, apply power. Use a test tone, at 1 kHz for example, to modulate the carrier at some level below 30%. If distortion is observed in the envelope, adjust the final tank circuit and input capacitors slightly. Now the modulation may be increased to a greater value, such as 50%, and the envelope rechecked for distortion and upward modulation. Repeat the procedure until an 80% modulation level is achieved.

Caution: *At this modulation level, adjustments in tuning should be made very carefully because it is extremely easy to detune the circuit far enough to exceed the ratings of the transistor. As a precaution, the modulation level should not be advanced to 100% during tone tests.*

If the average power output decreases as the modulation is increased (downward modulation), detune L_2 until upward modulation results. When the other circuits are properly retuned, the average output will be almost as

Note: It is preferable to use a coaxial lead in connecting the oscilloscope to the receiver.

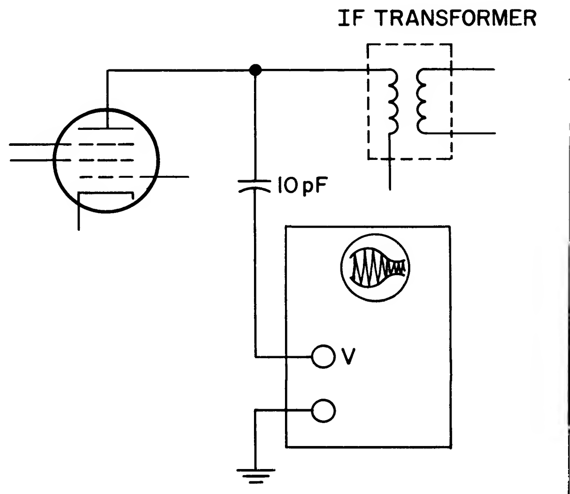

Figure 7: Schematic diagram showing method used by WB2EGZ to connect the signal from the transmitter to an oscilloscope.

RCA HAM TIPS is published by RCA Electronic Components and Devices, Harrison, N.J. It is available free of charge from participating RCA Industrial Distributors. It is also available on a two-year subscription basis ($1 for eight issues to cover costs of handling and mailing). Please make check or money order payable to Radio Corporation of America, and remit to "Radio Corporation of America, Section 882, Harrison, N. J. 07029."

great as the original unmodulated carrier. During alignment, care must be exercised to prevent overheating the transistors. After correct alignment, none of the transistors should be too hot to touch.

Although precise linearity is best determined using a trapezoidal pattern on the monitor 'scope, the author obtained good results by observing the RF envelope and listening for distortion in the tone. If sidebands are wide, slight tuning readjustments will help correct the wave form. Some broadness may be expected because the driver is modulated and because the output capacitance changes when a transistor is modulated. Before going on the air, set the modulation level to peak at 90% with the microphone to be used.

"On the Air"

Most hams contacted by the author have been surprised that transistors could be used to generate a signal on 2 meters so effectively and so inexpensively. In one band opening, a good contact was made with a station located 185 miles away. The power output averages 1.5 watts when using a 15-volt supply. Power consumption at this level is about 8 watts — a lot less than it takes to light the heaters of the smallest tube rig. Although operation of the transmitter from a 12-volt source is possible, the power output will be reduced. Should you desire to operate the transmitter using a power supply having wide variations of output voltage, it is advisable that you tune the transmitter using the lowest supply voltage. Direct operation from an automobile supply would not be practical without providing some means of regulation within the transmitter.

Care in the construction of a transistorized transmitter — as well as extreme patience in its alignment — are the keys to success. The rewards are a great feeling of pride and countless hours of trouble-free operation.

Acknowledgment: As with all projects of similar magnitude, the suggestions and experience of many people have been carefully integrated to make this transmitter a prime example of "results through cooperation." To George Hanchett, W2YM, go special credits for his aid in bringing costs "into line". The author is likewise indebted to Stan Matyckas, WB2IXE, for his contributions to the modulation techniques used. Some other useful references were as follows:

Adley, David L., "Designing 160-MHz FM/CW Solid-State Circuitry," Motorola Applications Note AN/68.

Alexander, Wilson E., "4W-200Mc Transistor Amplifier," Fairchild Application Data APP92, November, 1963.

Belke, R. E., Cleary, J. F., et al, "GE Transistor Manual," 7th Edition, 1964, pp 241-258.

Matyckas, S. J., "Design of an Amplitude-Modulated VHF Transmitter Using the RCA TA2267," RCA Application Note SMA-10.

Rheinfelder, W. A., "Modulation of Driver Stage to Increase Power Output of A-M Transmitter," "Semiconductor Products," March, 1962.

RCA HAM TIPS

A PUBLICATION OF RCA ELECTRONIC COMPONENTS AND DEVICES

VOL. 27, NO. 1

JUNE, 1967

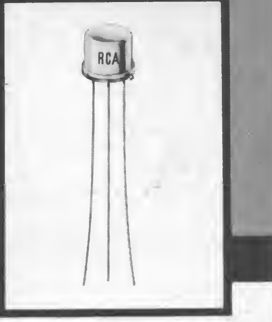

A Power Supply for Transistor Circuits

By R. M. Mendelson, W2OKO*

RCA Electronic Components and Devices

When a radio amateur first ventures into the construction of transistor circuits, he frequently encounters a "power" roadblock. He needs a low-voltage DC power supply that can provide up to several amperes of usable current, but has available only the old high-voltage, low-current supply that he has been using for vacuum tube circuits.

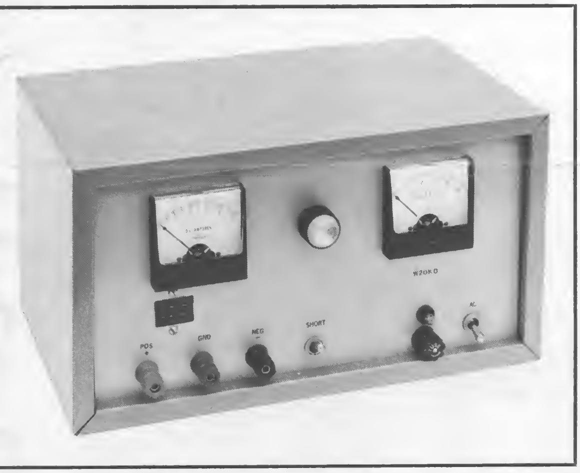

Exterior view of W2OKO's power supply shows lineup (left to right, bottom) of positive, ground, and negative terminals; shorting switch; fuse and pilot light (above fuse); and line-voltage switch. Unmarked control knob between the two meters is used for setting desired voltage.

The amateur need no longer be concerned with this problem. Several recently announced RCA silicon n-p-n power transistors (2N3053, 2N3054, and 2N3055) are ideally suited for construction of a small, well-regulated power supply having a continuously variable output of 5 to 25 volts at currents from milliamperes to 3 amperes. Such a supply greatly simplifies breadboard experimentation with almost any transistor circuit, and makes home-operation of mobile transistor equipment relatively easy.

Circuit Description

Figure 1 shows the schematic diagram of a conventional series-regulated power supply.

The RCA-2N3053 (Q_1) samples the output voltage and, through the RCA-2N3054 (Q_2), controls the voltage drop across the RCA-2N3055 (Q_3).

The 3.9-volt zener diode (D_5) provides a reference voltage for the emitter of the 2N3053.

Although the circuit is quite simple, regulation is very good. For example, if the output is set at 12.6 volts at zero load, a voltage drop of only 0.5 volt will occur when the load is increased to 3 amperes. When the output is set for a fixed load of 1 ampere at 12.6 volts (at a line voltage of 115 volts), the voltage change is less than 0.2 volt for a line-voltage swing from 100 to 130 volts.

---

*Solid-State and Receiving Tube Division, Somerville, N. J.

Construction

The layout of the power-supply circuit is not critical. As an aid to the builder, however, a typical chassis layout is pictured in Figures 2 and 3.

Builders of the power supply are given two important reminders:

First, a wire at least No. 18 AWG in size should be used for those sections of the circuit that carry the 3-ampere current. These sections are represented by heavy lines on

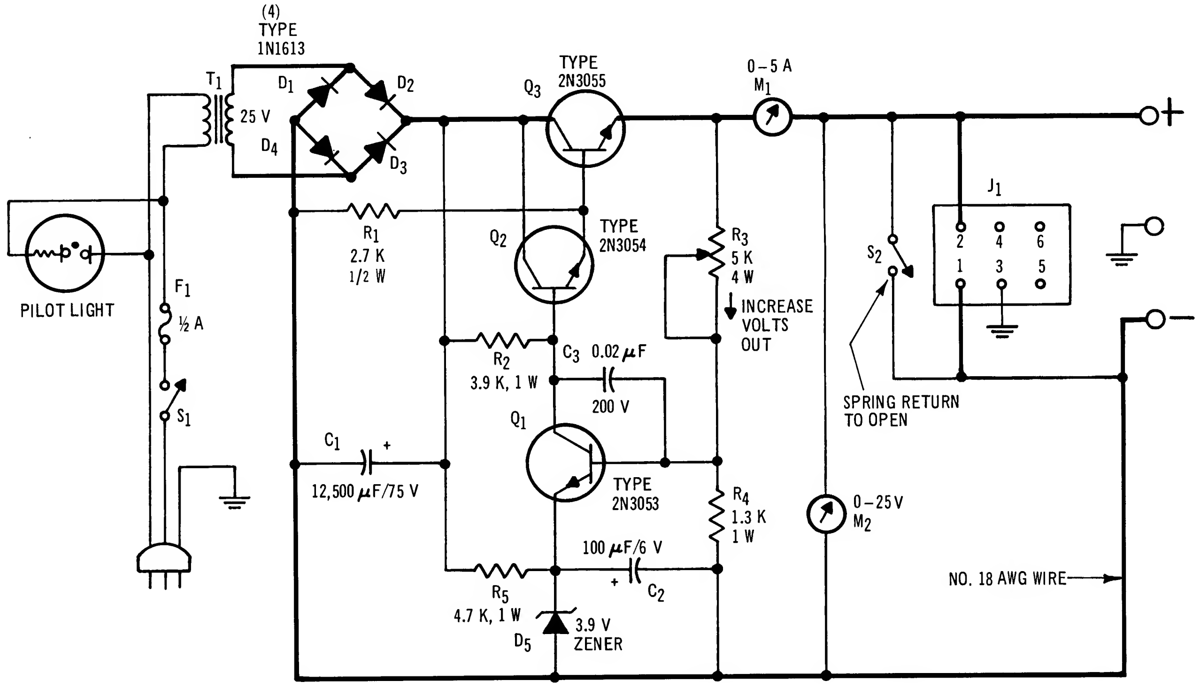

C_1 — 12,500 μF, 75 volts, electrolytic (Mallory CG1252U75G1 or equiv.)

C_2 — 100 μF, 6 volts (Sprague TE 1102 or equiv.)

C_3 — 0.02 μF, 200 volts (Sprague 2TM-S20 or equiv.)

D_1, D_2, D_3, D_4 — Diodes, RCA 1N1613

D_5 — Zener diode, 3.9 volt, 1 watt (International Rectifier Company Z1100 or equiv.)

F_1 — 0.5 ampere, slow-blow type

J_1 — Socket, 6 pin (Cinch-Jones S306AB or equiv.)

M_1 — Meter, 0-5 amperes (Simpson 1227C or equiv.)

M_2 — Meter, 0-25 volts (Simpson 1227C or equiv.)

Q_1 — Transistor, RCA-2N3053

Q_2 — Transistor, RCA-2N3054

Q_3 — Transistor, RCA-2N3055

R_1 — 2,700 ohms, ½ watt

R_2 — 3,900 ohms, 1 watt

R_3 — Potentiometer, 5,000 ohms, 4 watts, wirewound (Mallory M5MPK or equiv.)

R_4 — 1,300 ohms, 1 watt

R_5 — 4,700 ohms, 1 watt

S_1 — SPST, toggle (Cutler-Hammer 7580K6 or equiv.)

S_2 — SPST, toggle, spring-return to open (Cutler-Hammer 7506K3 or equiv.)

T_1 — Transformer, 25 volts, 2 amperes (Stancor P8357 or equiv.)

Miscellaneous — Cabinet (Bud Futura MD1960 or equiv.); Chassis, 7 by 9 by 2 inches (Bud CB40 or equiv.); 1 Transistor Socket (Cinch-Jones 2TS-4 or equiv.); 1 Heat Sink (Lafayette Radio 30G-1020 or equiv.); 3 Binding Posts (H. H. Smith 257 or equiv.); 1 Pilot Light with built-in resistor (Dialco 249-7841-933 or equiv.); 1 Fuse Post, 3AG (Littelfuse 342004 or equiv.)

Figure 1: Schematic diagram and Parts List of W2OKO's power supply for transistor circuits. Heavy lines in schematic show sections of circuit that carry 3-ampere current. Wire used for these sections should be No. 18 AWG in size.

the Figure-1 schematic diagram. Wire of the same size is also desirable for leads to external circuits.

Second, an adequate heat sink should be employed in the mounting of the high-current transistors and the rectifier diodes. The heat sink used by the author (see Figure-1 Parts List) has proved ideal, and performs best when vertically mounted and isolated from other components.

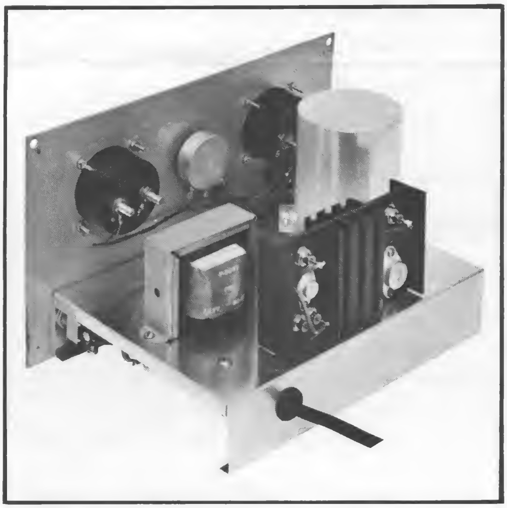

Figure 2: Rear view of W2OKO's power supply shows layout arrangement of four power diodes and 2N3054 and 2N3055 transistors on heat sink. Builders are advised to leave sufficient room around heat sink for air circulation.

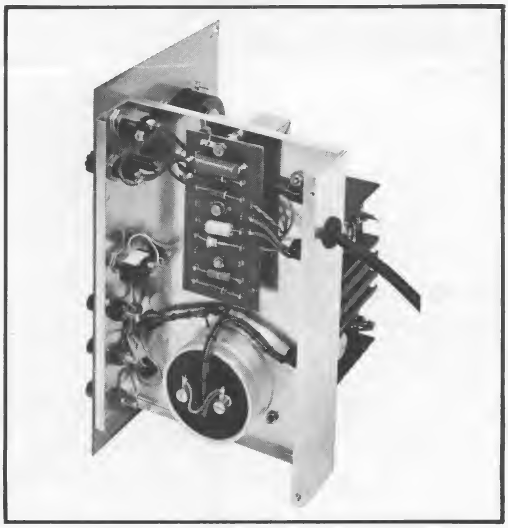

Figure 3: Bottom view of power supply shows how 2N3053 transistor is mounted on terminal board together with all the small components of the circuit.

Because the collectors of the 2N3054 (Q_2) and 2N3055 (Q_3), and the cathode studs of the rectifier diodes, D_2 and D_3, have one electrical point in common, all these devices may be bolted directly to the heat sink without insulation — provided the heat sink is electrically insulated from the chassis. Such insulation is easily achieved by drilling and tapping two holes in the bottom edge of the heat sink and then installing fiber shoulder

Figure 4: Closeup of left side of heat sink shows how it is insulated from the chassis by fiber shoulder washer (arrow). Note how hexagonal mica insulator is placed under diode, D_1, shown at top. The same arrangement should be used in mounting diode, D_4, on the right side of the heat sink.

RCA HAM TIPS is published by RCA Electronic Components and Devices, Harrison, N.J. It is available free of charge from participating RCA Industrial Distributors. It is also available on a two-year subscription basis ($1 for eight issues to cover costs of handling and mailing). Please make check or money order payable to Radio Corporation of America, and remit to "Radio Corporation of America, Section 882, Harrison, N. J. 07029."

washers (see Figure 4 for illustration).

Exact positioning of components on the heat sink is not important, but holes around the emitter and base pins must provide ample clearance. Wires can be soldered directly to these pins with the aid of a small pencil-type iron. The remaining two diodes (D_1 and D_4) may also be mounted on the heat sink, but must be insulated from it by the mica spacers supplied with the diodes. Although this entire assembly is above ground potential, it receives only the low voltage from the transformer secondary.

The shorting switch across the output terminals must be of the spring-return (back to "open" position) type in order to avoid damage to the power-supply unit.

Operation

Properly constructed, the power supply should have a range of approximately 5 to 25 volts. Use of an adequate heat sink should permit a full current of 3 amperes to be drawn continuously.

Because the 2N3055 (Q_3) acts as a series resistor, lower output voltages increase the voltage drop across this transistor. The greater the voltage drop, the greater the heat dissipation at Q_3. If lower output voltages are desired, the operator must be especially mindful of the fact that current should not exceed 3 amperes.

The shorting switch (S_2) is used when the power supply is connected to an experimental circuit and voltage must be removed from the circuit in order to make a change. Although line voltage is removed by turning off the main switch (S_1), discharge of the filter capacitor (C_1) may require up to several minutes. Use of S_2 accomplishes this discharge almost instantaneously.

If S_2 is accidentally closed while the power is still on, the power supply saturates at approximately 5 amperes; however, no damage occurs unless the switch is kept closed for many seconds.

Conclusion

With this handy, well-regulated power supply available on the work bench, the radio amateur can try out almost any transistor circuit "at the flick of a switch," and need no longer engage in time-consuming battery hunts as a prelude to breadboard experimentation.

Easy to construct and operate, the W2OKO unit employs three well-established RCA transistor types which provide the amateur with stable, reliable performance over a long service life.

RCA® HAM TIPS

A PUBLICATION OF RCA ELECTRONIC COMPONENTS AND DEVICES

VOL. 27, NO. 2 © 1967, RADIO CORPORATION OF AMERICA AUGUST, 1967

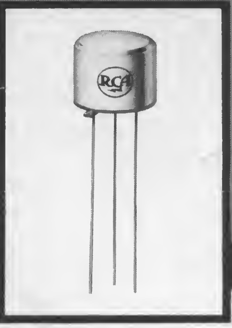

A VFO CALIBRATOR

By George D. Hanchett, W2YM*

RCA Electronic Components and Devices

To many of our readers who are also readers of "QST" Magazine, the following article and the name of its author should have a familiar ring. In the December, 1966, issue of that magazine, George D. Hanchett reported on "The Field-Effect Transistor as a Stable VFO Element" and was honored with the QST Cover Award for having submitted the most outstanding article of the month. In his current "Ham Tips" article, Mr. Hanchett supplements his earlier contribution with a highly useful device whose need was envisioned during the course of his experimentation with variable-frequency oscillators. This device offers a solution to the problem confronted by radio amateurs who own receivers limited to hamband frequencies and have no way of calibrating VFO's which operate outside those frequencies. The "VFO Calibrator" discussed by Mr. Hanchett is designed to calibrate any VFO on any frequency, and serve the radio amateur in other important applications as well.

Convenient, rugged, and compact design of W2YM's VFO calibrator provides users with a long-life instrument that can be employed for numerous hamshack assignments.

During recent experiments with a VFO for operation at frequencies other than those tuned by an amateur-band receiver, it became desirable for the writer to have some type of calibrator to which the VFO could be coupled so that a series of calibration points could be determined and marked on the VFO dial.

The basic idea employed for the VFO calibrator described in this article is not new and will be recognized by many amateurs as the system used in the well-known war-surplus frequency meter, BC-221. *(Editor's Note: The VFO calibrator can also be used to calibrate signal generators, etc.)*

Harmonics of the secondary-standard 100-kHz crystal oscillator are beat with the fundamental, or harmonics, of the VFO to provide audible signals at definite frequencies across the dial. For example, if this unit is used with a 5.0-to-5.5-MHz VFO such as the type widely utilized for SSB operation, the 100-kHz calibration points are the strongest by far. How-

---

*Solid-State and Receiving Tube Division, Somerville, N. J.

ever, the 50-kHz points are also perceptible and, if proper care is exercised, the 33-, 25-, and 20-kHz points can be detected as well. In practice, the calibrator is permanently connected to the RF line between the VFO and the transmitter, and may be turned on when needed.

Circuit Description

The schematic diagram and Parts List for the calibrator are shown in Figure 1. The 100-kHz oscillator, Q_3, is of the tuned-collector type, with the crystal, Y_1, inserted in the base feedback circuit. The 25-pF padder

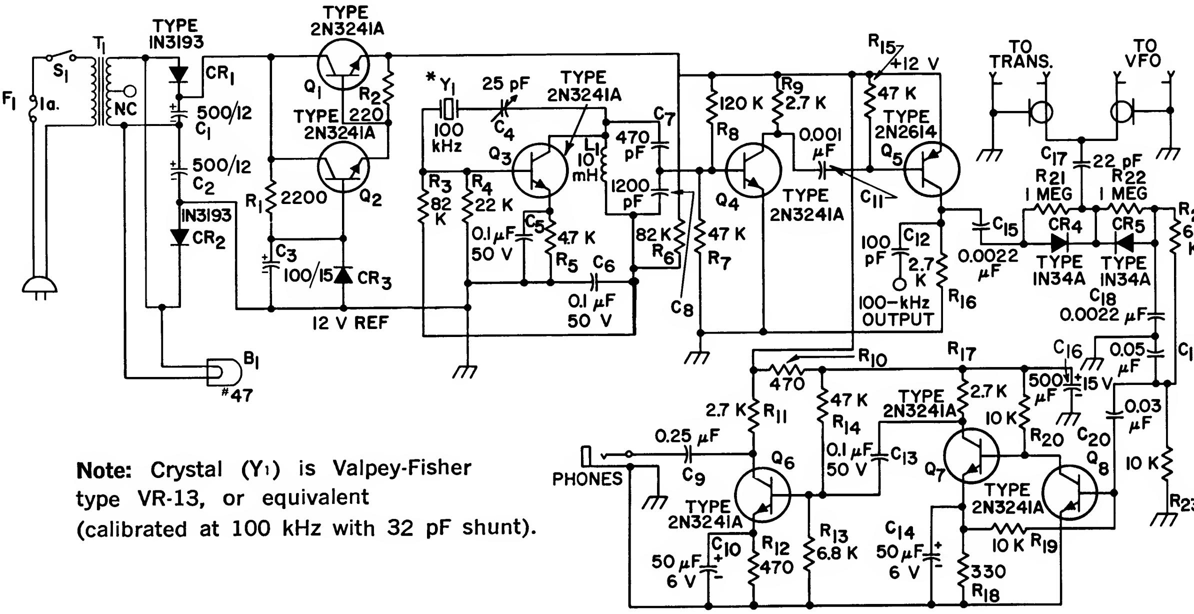

Note: Crystal (Y_1) is Valpey-Fisher type VR-13, or equivalent (calibrated at 100 kHz with 32 pF shunt).

B_1 — Lamp, No. 47
C_1, C_2 — 500 µF, 12 volts
C_3 — 100 µF, 15 volts
C_4 — 25 pF, adjustable padder type, air dielectric (Hammarlund APC-25 or equiv.)
C_5, C_6, C_{13} — 0.1 µF, 50 volts, ceramic
C_7 — 470 pF, 500 volts, silver mica type
C_8 — 1,200 pF, 500 volts, silver mica type
C_9 — 0.25 µF, 200 volts, paper
C_{10}, C_{14} — 50 µF, 6 volts
C_{11} — 0.001 µF, 1,000 volts, ceramic
C_{12} — 100 pF, 1,000 volts, ceramic
C_{15}, C_{18} — 0.0022 µF, 1,000 volts, ceramic
C_{16} — 500 µF, 15 volts
C_{17} — 22 pF, 1,000 volts, ceramic
C_{19} — 0.05 µF, 50 volts, ceramic
C_{20} — 0.03 µF, 50 volts, ceramic
CR_1, CR_2 — Diodes, RCA 1N3193
CR_3 — Reference diode, 12 volts
CR_4, CR_5 — Signal diodes, type 1N34A
F_1 — Fuse, 1 ampere
L_1 — RF choke, 10 mH (Miller 70F-102A1 or equiv.)
Q_1, Q_2, Q_3, Q_4, Q_6, Q_7, Q_8 — Transistors, RCA-2N3241A
Q_5 — Transistor, RCA-2N2614
(Note: All following resistors ½ watt)
R_1 — 2,200 ohms
R_2 — 220 ohms
R_3, R_6 — 82,000 ohms
R_4 — 22,000 ohms
R_5 — 4,700 ohms
R_7, R_{14}, R_{15} — 47,000 ohms
R_8 — 120,000 ohms
R_9, R_{11}, R_{16},
R_{17} — 2,700 ohms
R_{10}, R_{12} — 470 ohms
R_{13} — 6,800 ohms
R_{18} — 330 ohms
R_{19}, R_{20}, R_{23} — 10,000 ohms
R_{21}, R_{22} — 1 megohm
R_{24} — 68,000 ohms
S_1 — Switch, SPST toggle, 3A, 125 volts
T_1 — Transformer, 6.3 volts, 1.2 amperes (Thordarson 21F09 or equiv.)
Y_1 — Crystal, Valpey-Fisher type VR-13 or equivalent (calibrated at 100 kHz with 32 pF shunt)

Miscellaneous — 1 crystal socket for HE6/U; 1 headphone jack; 1 aluminum two-piece Minibox (or equiv.), 5-by-4-by-3 inches; 1 phenolic circuit board, 3-by-4½ inches; 2 UHF coaxial connectors (Amphenol SO239 or equiv.); 1 binding post (E. F. Johnson six-way type or equiv.)

Figure 1: Schematic diagram and Parts List of W2YM's VFO calibrator.

capacitor, C_4 (xtal adjust), is connected in series with the crystal so that oscillation can be adjusted to exactly 100 kHz. Capacitors C_7 and C_8 are used as a voltage divider to reduce the coupling to the input of the two-stage wave-shaping amplifier, Q_4 and Q_5, and thus prevent loading of the secondary-standard oscillator. The two-stage wave-shaping amplifier provides the following advantages:

1. It prevents any reflection of the output load from affecting the frequency of the 100-kHz secondary-standard oscillator.
2. It shapes the output wave so that the harmonics are of greater strength.

The output of the two-stage wave-shaping amplifier is connected to one input of a two-diode product detector, CR_4 and CR_5, and the VFO to be calibrated is connected to the other input. The wave-shaping amplifier output is also connected to a binding-post terminal so that the unit can be used as a conventional 100-kHz crystal calibrator. The values of the components shown in the circuit diagram have been chosen for a peak VFO signal level of 2 to 3 volts. For larger VFO signals, it will be necessary to replace the 22-pF capacitor, C_{17}, with some type of capacitive or resistive attenuator.

A three-stage amplifier — Q_6, Q_7, Q_8 — is used to amplify the extremely low audio output of the two-diode product detector to a comfortable head-phone level. The power supply for the complete unit is regulated by use of a zener reference diode, CR_3, and a two-transistor regulator, Q_1 and Q_2.

Construction

The complete calibrator unit is built into a 5-by-4-by-3-inch aluminum two-piece Minibox. The 100-kHz crystal oscillator, the two-stage wave-shaping amplifier, the diode product detector, and the three-stage audio amplifier are all assembled on a 3-by-4½-inch phenolic circuit board. This method of construction, illustrated in Figures 3 and 4, results in a convenient, rugged, and compact design. A full-size layout of this board is provided in Figure 2. It may be cut out and taped to the board for use as a drilling template. Terminal connectors for the circuit board are made from small pieces of No. 14 bus wire about one inch in length. This bus wire is bent into a "J" shape; pushed through the No. 54 holes; and then bent around to lock the terminal in place.

The crystal socket and the air capacitor used for setting the frequency are mounted on a small piece of aluminum which is attached to one end of the circuit board. The circuit board is separated from the Minibox by threaded, ⅜-inch, 4-40 spacers and 4-40 screws. RF connections to the VFO and transmitter are accomplished through standard UHF coaxial connectors mounted on the rear of the unit. The 100-kHz output terminal is also mounted on the rear of the unit.

Adjustment and Operation

The adjustment of the 100-kHz secondary-standard oscillator to precisely 100 kHz is easily accomplished by comparison of its harmonic with that of the primary standard, WWV. For the best beat signal, the 100-kHz output of the calibrator should be loosely coupled to the antenna of the receiver tuned to WWV. Capacitor C_4 should then be adjusted through the crystal-adjustment hole until a zero beat exists between the secondary standard and WWV. It would be well to wait for the quiet period of WWV's transmission (when there is no 440-Hz modulation) to be absolutely certain that the secondary standard is beating with the carrier and not with the modulation.

The use of the calibrator is extremely simple. It is inserted in the RF line of the VFO by connecting the VFO to the input coaxial connector and the transmitter to the output connector. When power is applied to the unit and headphones are inserted in the phone jack, a slight hissing noise should be heard. This noise indicates that the audio amplifier is active. At, or near, the even 100-kHz points on the VFO, low beat notes should be heard. Calibration of the dial can then be performed by zero-beating the VFO at those points. Lower-volume beats may be heard at the 50-kHz points on the dial, and in most cases it is also possible to hear the 33-, 25-, and 20-kHz beats, especially if the fundamental operating frequency of the VFO is below 5 MHz.

With many of today's amateur-radio receivers designed solely for hamband reception, the VFO calibrator is especially applicable to oscillators operating at frequencies outside the hambands. In addition, the unit can prove very useful for calibrating certain types of test equipment and for allowing the VFO to be used as a hamband frequency meter.

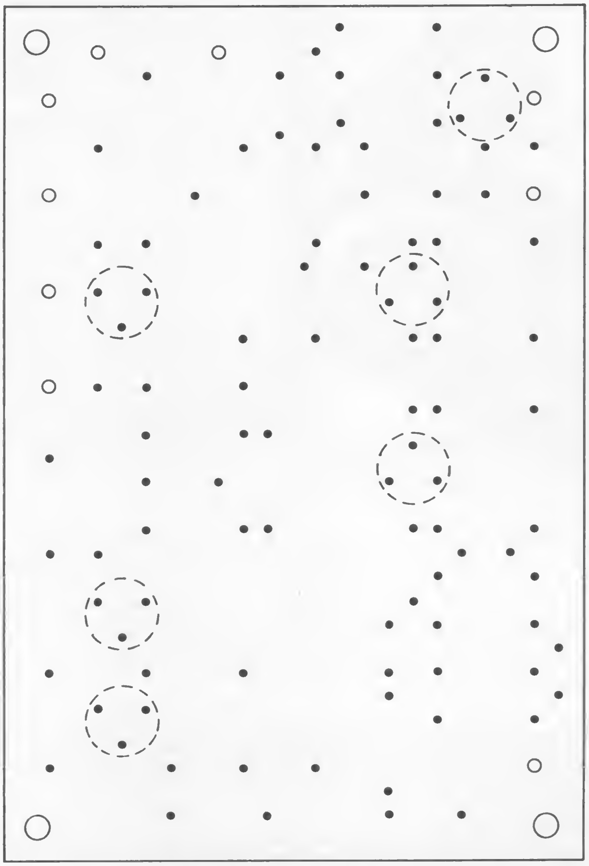

Figure 2: Bottom view of 3-by-4½-inch circuit board is shown to full scale and can be cut out and taped to phenolic board for use as a drilling template. Note that holes are of three sizes and, from largest to smallest respectively, are made with No. 32, No. 54, and No. 60 drills.

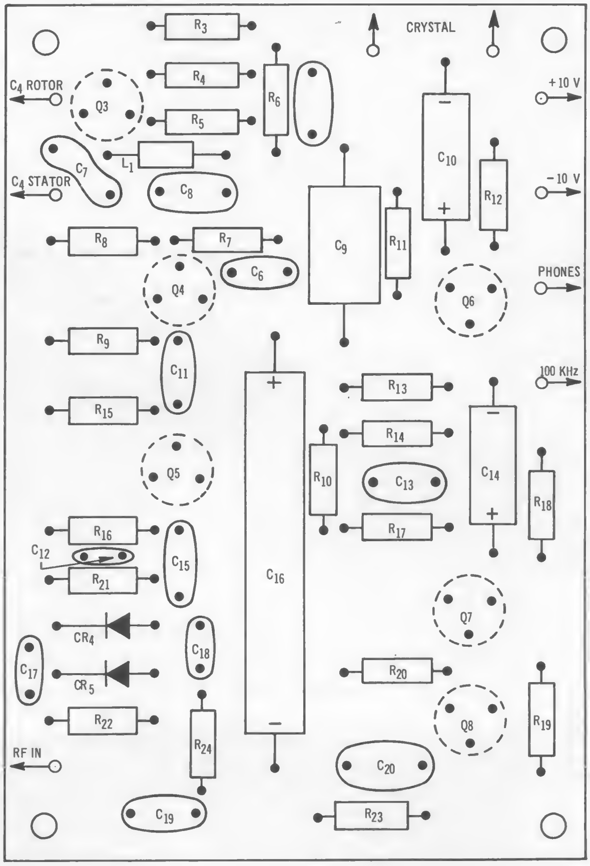

Figure 4: Top view of circuit board with parts layout.

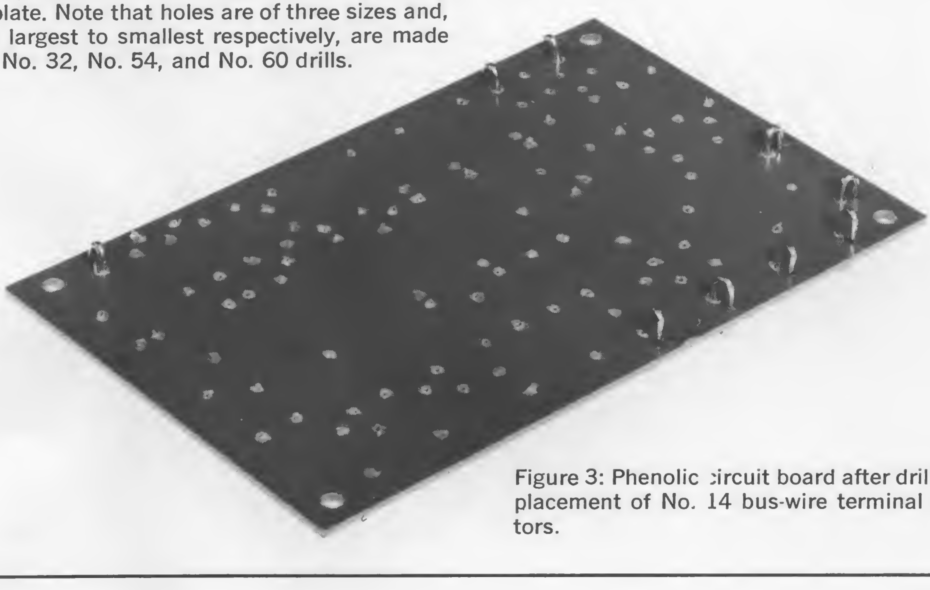

Figure 3: Phenolic circuit board after drilling and placement of No. 14 bus-wire terminal connectors.

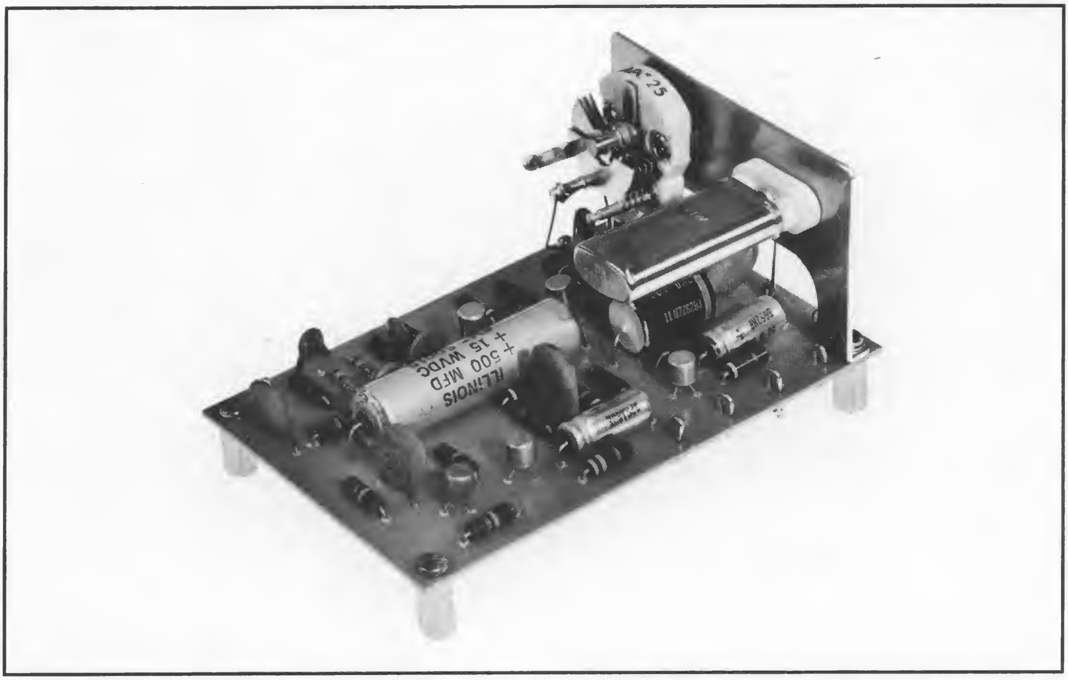

Figure 5: Pictorial view of completed circuit board. Note that the frequency-set capacitor and crystal are mounted on a small bracket attached to the right end of the board.

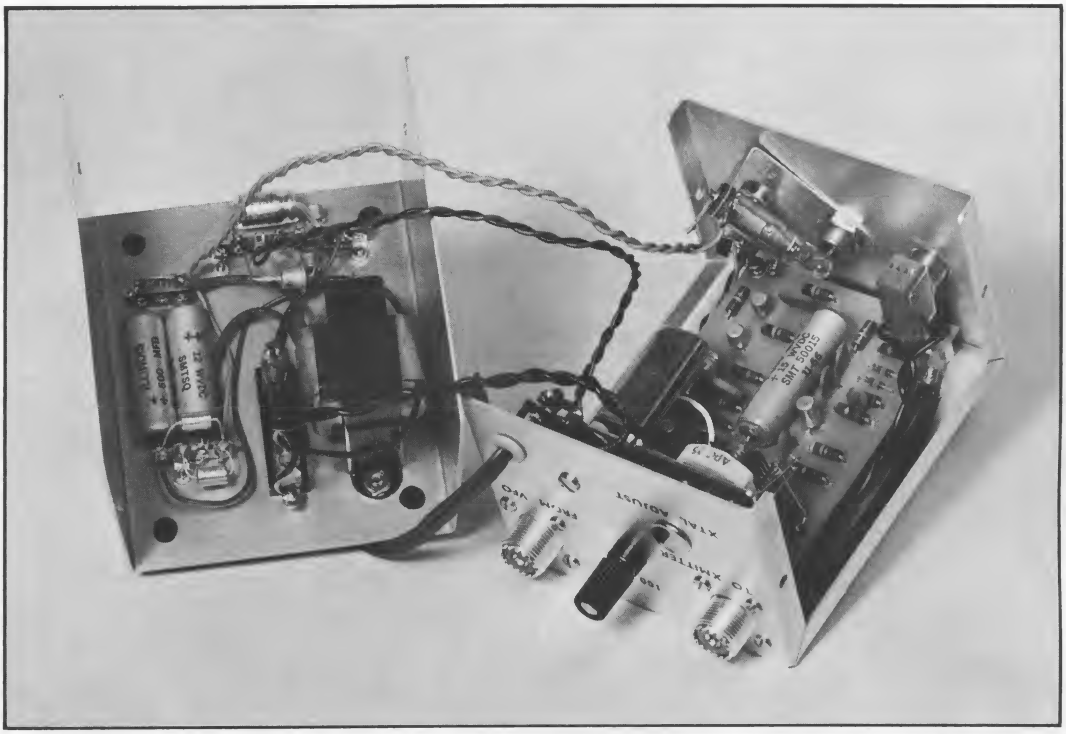

Figure 6: Internal view of calibrator. Note that power supply components are mounted on the bottom cover of the Minibox.

RCA HAM TIPS is published by RCA Electronic Components and Devices, Harrison, N.J. It is available free of charge from participating RCA Industrial Distributors. It is also available on a two-year subscription basis ($1 for eight issues to cover costs of handling and mailing). Please make check or money order payable to Radio Corporation of America, and remit to "Radio Corporation of America, Section 882, Harrison, N. J. 07029."

DISTRIBUTED BY
GEORGE D. BARBEY CO., INC.
READING LEBANON
LANCASTER POTTSTOWN

BLK. RT.
AD'L. 7/8¢ PD.

READING PA.
U.S. POSTAGE .02
P.B. METER 826984

Powerhouse!

At RCA, power tube engineers are constantly working to improve the line—to provide the best possible tube for each amateur's choice of band, mode, and power. Check the tabulation ...see your authorized RCA industrial tube distributor for the *right* tubes for your rig—CW or phone—in the bands you operate. For specific tube data sheets write to RCA Commercial Engineering, Harrison, N.J. 07029.

RCA Electronic Components and Devices
The Most Trusted Name in Electronics

A FEW OF THE MANY RCA POWER TUBES FOR AMATEUR USE

Frequency	Power	Tube Type	Remarks
Up to 60 MHz	low	6146B/8298A	The latest version of the original RCA-developed "standard"
	medium	pair of 6146B/8298A	General use RF amplifier or AF modulator
	high	813	
Up to 500 MHz	low	8072	Ideal for VHF/UHF
		8462	Quick-heat type for mobile use
	medium	8121	No chimney or expensive socket required
	high	8122	Low-drive requirement
500 MHz and above	high	7650	KW (CW) input up to 1215 MHz

Available from Your RCA Industrial Tube Distributor.

RCA

HAM TIPS

A PUBLICATION OF RCA ELECTRONIC COMPONENTS AND DEVICES

VOL. 27, NO. 3 © 1967, RADIO CORPORATION OF AMERICA OCTOBER, 1967

Using the MOS Field-Effect Transistor As a Product Detector and AGC Gate

By W. M. Stobbe, W3KDT*

RCA Electronic Components and Devices

The paragons of two worlds of electronics — the vacuum tube and the solid-state device — have been successfully combined in the RCA-developed insulated-gate metal-oxide-semiconductor (MOS) field-effect transistor. This transistor features such useful characteristics as extremely high input impedance, excellent low-noise qualities, high power gain throughout the VHF region, and a square-law transfer characteristic over a substantial current range. Its transfer characteristic makes the device ideal for use as a product detector. Considerably less BFO voltage (in the order of a few millivolts) is required in this transistor than in the conventional diode or other devices.

In the following article, W3KDT describes the use of the RCA-3N128 MOS field-effect transistor as a product detector and automatic-gain-control recovery gate in converting an older-type receiver to single-sideband use. The AGC system is unique in that it receives signal from the receiver noise-limiter output and therefore prevents noise peaks from initiating the AGC voltage.

It may be noted by some readers that, from a purely theoretical standpoint, this circuit is a departure from some conventional product-detector circuits. The end results of this single-sideband-detection system, however, are quite comparable.

Figure 1: Front panel of the RCA-CR-91 general-purpose communications receiver. The AGC switch (extreme right) was subsequently modified to include "SSB" in a fifth position.

---

*Electronic Instruments Operations, Harrison, N. J.

Following the end of World War II, the RCA-CR-91 general-purpose communications receiver (see Figure 1) found its way into the hands of numerous hams through war-surplus channels.

The author has used a general-purpose receiver of this type for several years and—with the growing popularity of single side-band—began to investigate the various methods for adapting the unit to SSB operation.

This paper discusses the design of a product detector and AGC circuit that incorporates the MOS field-effect transistor as the active element. Figure 2 shows a block diagram of the SSB receiver, indicating the positions of the product detector and AGC circuits. These circuits are connected into the receiver for SSB operation by means of the automatic-volume-control (AVC) switch. *Although the product detector and AGC system are discussed with specific reference to the CR-91 receiver, these circuits may be applied to any general-purpose communications receiver. Separate schematics are illustrated in the text for this purpose.*

Product Detector

Figure 3 shows the schematic diagram of the product detector. A separate IF-transformer, T_{100}, is used to couple the SSB-IF-signal from the grid of the third IF-amplifier tube to the field-effect transistor. Capacitor C_{101} minimizes capacitive loading on the circuit being sampled and also permits tuning of the primary winding of the transformer, T_{100}. Capacitor C_{102}, which consists of a twisted-wire "gimmick," couples the BFO voltage to the product detector. Any excess BFO voltage blocks the SSB signal and reduces the output level.

As the output of the product detector is switched into the receiver audio-frequency volume control, the output of the conventional AM detector is disconnected from the circuit. The BFO should be "on" and the AVC system switched to "manual." Gain is then controlled by the RF gain control. If the audio AGC is used, this voltage is connected into the receiver AVC bus. Audio volume is then set to about three-quarters of full "on," and the sensitivity is controlled by the RF gain control. The SSB signal is tuned for maximum intelligibility by means of the main tuning control and the BFO pitch control.

Audio AGC

Operation on SSB can be greatly enhanced by use of an audio-derived AGC circuit. This circuit permits controlled volume and use of the "S" meter to interpret signal strength.

The AGC circuit shown in Figure 4 consists of a two-stage audio amplifier that uses silicon n-p-n transistors; an AGC diode; and an MOS field-effect transistor for the recovery

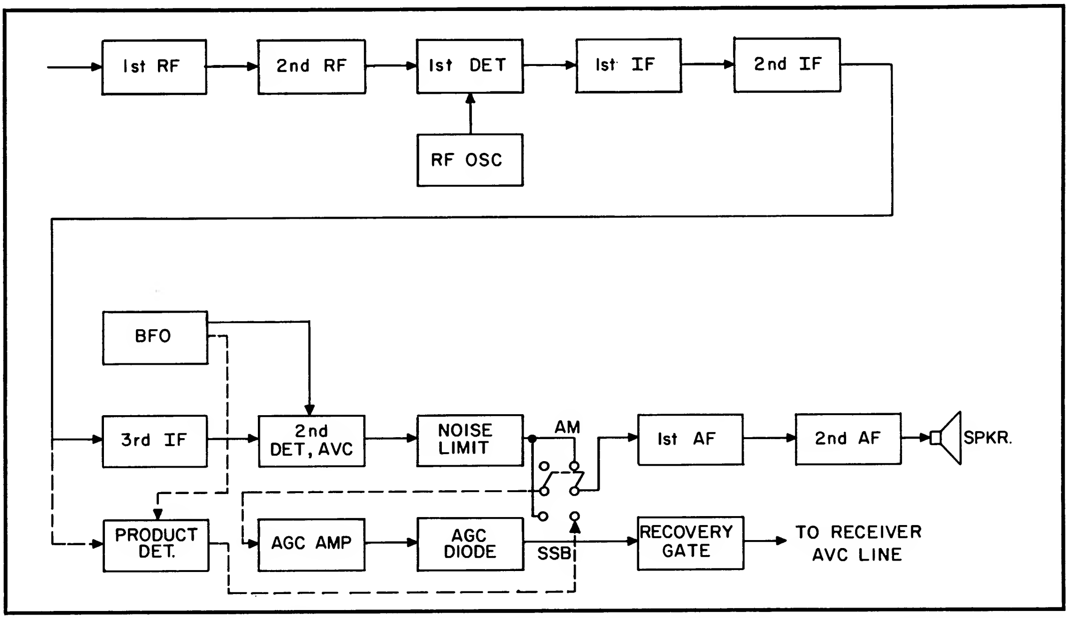

Figure 2: Block diagram of a typical general-purpose communications receiver showing additions (dashed lines) of product detector and AGC system.

gate. Proper operation of this circuit requires a completely isolated AVC line in the receiver with infinite resistance to ground, and use of the MOS transistor in conjunction with a time-constant circuit to control recovery to the maximum-gain bias condition.

The AGC-amplifier input signal is obtained from the output of the receiver noise limiter. This arrangement removes noise peaks which might initiate AGC. A good-quality audio-amplifier section is not required at this point because the control voltage is developed by the peaks on the waveform of the average human voice.

After the signal is amplified, it is passed into the AGC diode, CR$_2$. The output of the diode is applied to the time-constant RC network, R$_{11}$ and C$_6$, which controls the decay time of the AGC. The MOS transistor is connected across the AGC output line, and is in a

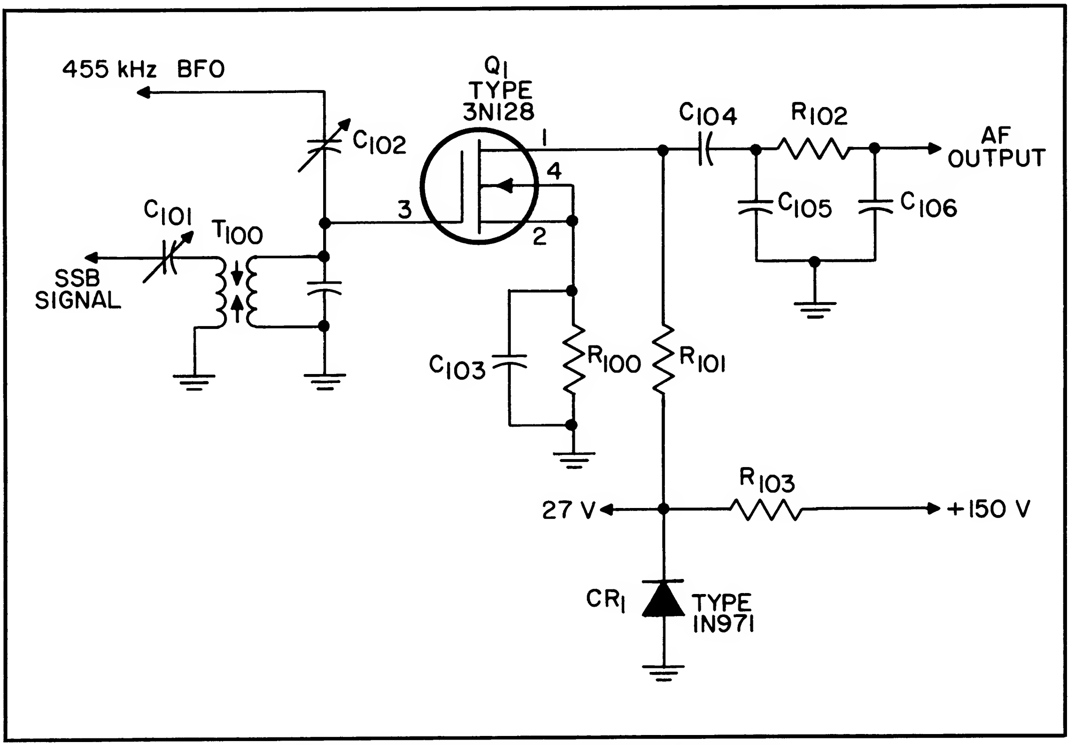

Figure 3: Schematic diagram of product detector.

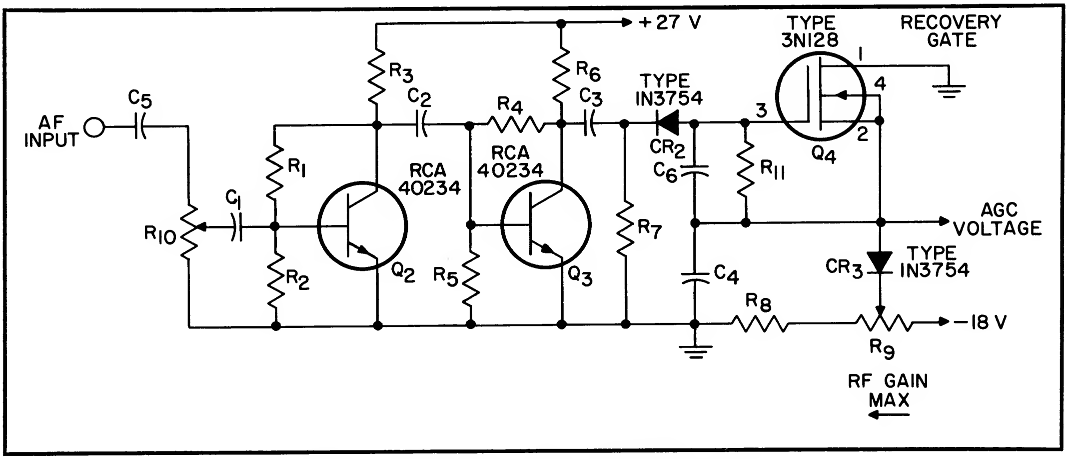

Figure 4: Schematic diagram of AGC system.

nonconducting state when the signal is applied. The threshold of conduction is determined by the receiver RF gain control. The RF gain control is isolated from the AGC line by means of the receiver AVC diode, CR_3. The time-constant RC network discharges at its normal rate until the gate voltage on the field-effect transistor reaches a point with respect to the source that permits conduction to take place between the drain and the source. At this point, the AGC voltage decay is speeded up until another input signal resets the time constant. As a result, the AGC voltage has fast attack and slow decay to the point of conduction, and its "hang" time is determined by the values of R_{11} and C_6. The

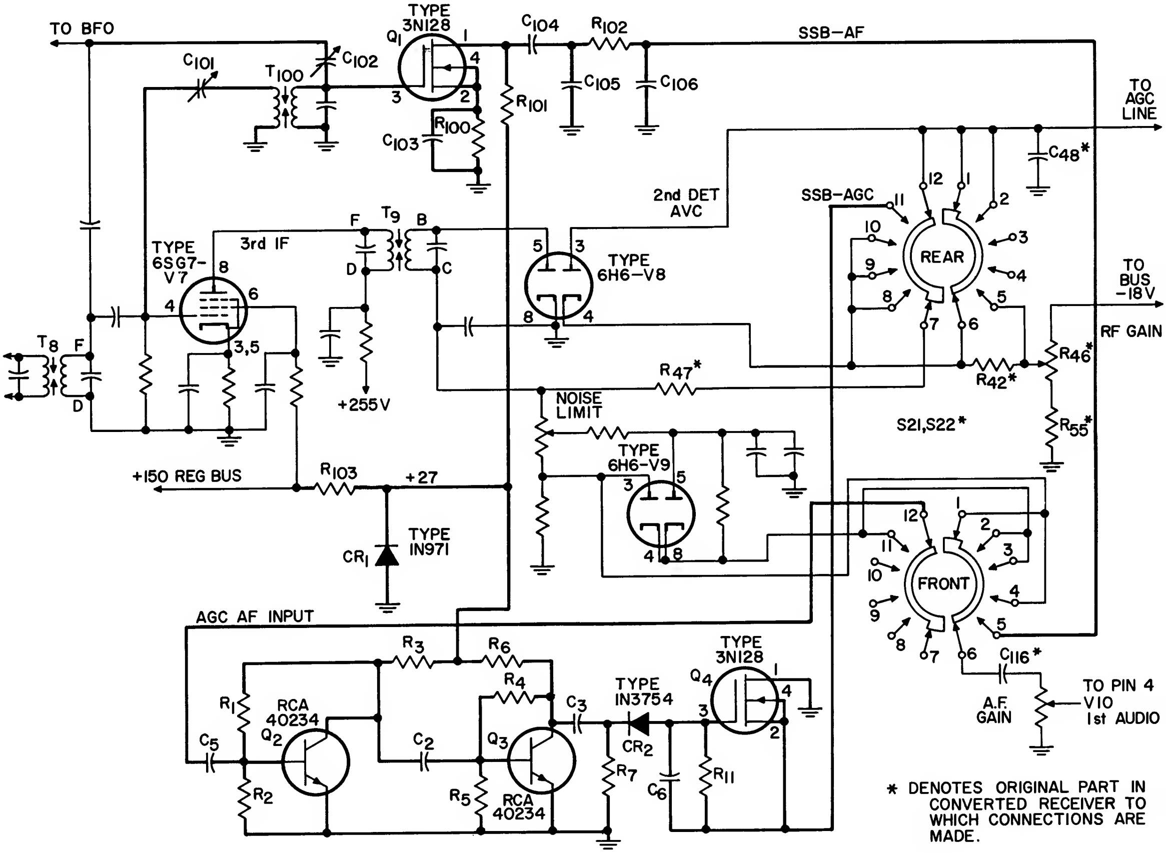

* DENOTES ORIGINAL PART IN CONVERTED RECEIVER TO WHICH CONNECTIONS ARE MADE.

Product Detector:

C_{101} — 4-40 pF, midget trimmer (Arco type 40-403 or equiv.)
C_{102} — 1 pF (twisted-wire "gimmick")
C_{103} — 0.47-μF disc., 10-volt (Centralab UK-10 or equiv.)
C_{104} — 1,500-pF disc (Centralab DD-152 or equiv.)
C_{105}, C_{106} — 330-pF disc (Centralab DD-152 or equiv.)
R_{100} — 470,000 ohms, ½ watt
R_{101} — 1 megohm, ½ watt
R_{102} — 47,000 ohms, ½ watt
R_{103} — 15,000 ohms, 2 watts
T_{100} — IF transformer, 455 kHz (J. W. Miller 12-C1 or equiv.)

AGC Amplifier:

C_1, C_2, C_3, C_5 — 0.01-μF disc (Centralab DD-103 or equiv.)
C_4 — 0.05-μF disc, 20-volt (Centralab UK-20-503 or equiv.)
C_6 — 0.47 μF-disc, 10-volt (Centralab UK-10 or equiv.)
R_1, R_4 — 33,000 ohms, ½ watt
R_2, R_5 — 1,800 ohms, ½ watt
R_3, R_6 — 10,000 ohms, ½ watt
R_7 — 470,000 ohms, ½ watt
R_8 — 5,600 ohms, ½ watt
R_9 — 50,000 ohms, 2 watts, carbon potentiometer
R_{10} — 10,000 ohms, ½ watt, carbon potentiometer
R_{11} — 10 megohms, ½ watt
S_{21}, S_{22} — replacement, 5-position, 4-pole, 2-section wafer switch (Centralab PA-1012 or equiv.)

Figure 5: Schematic diagram of CR-91 receiver modified for SSB operation. Product detector and AGC system are indicated by heavy lines, with separate parts-list shown for each.

size of the capacitor, C_6, may be varied to change the decay time as desired. A switch can also be used to select two or three different time constants.

For the components shown in Figure 4, the maximum-gain bias voltage is about —2 volts. There must be no leakage to ground on the AGC bus; even a resistance in the order of megohms will interfere with proper operation of the receiver. For example, the load of VTVM is sufficient to discharge the bus and destroy the "hang" feature. The minimum-gain AGC voltage levels off at about —7 volts as a result of saturation by the amplifying transistors. Additional limiting is obtained by adjustment of R_{10}.

AGC Operation

For optimum operation, the following parameters of the AGC system are adjusted:

- **Maximum-gain threshold.** The threshold voltage establishes the conducting state of the recovery gate, Q_4, or the maximum-signal fixed-bias level set on the AGC line. This voltage is adjusted by means of the receiver RF gain control.
- **Minimum-gain limiting.** The amount of AGC bias voltage connected to Q_2, Q_3, and CR_2 depends on the amount of signal voltage present at the base of Q_2. This voltage is adjusted by means of R_{10}.
- **"Hang" time constant.** This parameter is defined as the period of time from the initial signal that produces the AGC voltage until the discharge of the RC network to the point where Q_4 starts to conduct. This time may be varied by selection of different values of C_6.

Modified CR-91 Receiver

Figure 5 shows the complete schematic for conversion of the CR-91 to SSB operation.

When the AGC circuit shown in Figure 4 is inserted in the CR-91 receiver for SSB operation, the maximum-gain bias voltage is about —2 volts. Resistors R_8 and R_9 and Capacitor C_4 are replaced by R_{55}, R_{46}, and C_{48}, respectively, of the original receiver. The AVC diode, CR_3, is replaced by one-half of the 6H6-V_8 diode tube, which is normally used in the AVC circuit. Minimum-gain limiting is accomplished by adjustment of the noise-limiter control. An increase of the noise-limiter action limits the available average audio input to the AGC amplifier. Because only one value of time constant is used, it is not necessary to add any controls or switches to the front panel.

Figure 6: Layout of product-detector (left) and audio-AGC (right) components on vector board. Short wire in center of board is the product-detector output; long wire is the audio input for the AGC system.

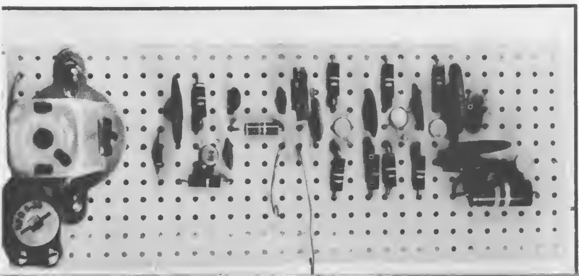

Figure 7: Mounting of circuit board under the receiver chassis.

The AVC switch (S_{21}, S_{22}) is replaced by a 5-position, 4-pole, 2-section wafer switch (Centralab PA-1012 or equivalent). The fifth position of this switch connects the receiver for SSB operation. Switching for SSB includes the following steps:

1. The AM detector output is disconnected.
2. The product-detector output is connected into the first audio stage.
3. The noise-limiter output is switched into the AGC amplifier.
4. The AGC output is switched into the AVC bus.
5. R_{47} (a 2-megohm resistor) is disconnected from the AVC bus.
6. R_{42} (a 390,000-ohm resistor) is shorted out, and V_8 is connected in series with the RF gain bias line as an isolation diode.

For SSB operation, the operator must also switch on the BFO. This function can be made part of the AVC switch by addition of another wafer with parallel connections to the BFO switch.

RCA HAM TIPS is published by RCA Electronic Components and Devices, Harrison, N. J. It is available free of charge from participating RCA Industrial Distributors. It is also available on a two-year subscription basis ($1 for eight issues to cover costs of handling and mailing). Please make check or money order payable to Radio Corporation of America, and remit to "Radio Corporation of America, Section 882, Harrison, N. J. 07029."

Power for both the product detector and the AGC amplifier is obtained from the regulated 150-volt bus. This voltage is reduced to 27 volts by means of a dropping resistor and a zener diode.

Construction

Except for controls and switches, the entire circuit is mounted and wired on a vector board, approximately 6¾ inches long and 2¾ inches wide, as shown in Figure 6. Figure 7 shows how the board is fastened at a convenient place under the receiver chassis by use of long bolts and spacers. Wires are then run from terminals on the board to the receiver circuits.

Alignment of Product Detector

For alignment of the product detector, a tone-modulated RF signal is applied to the receiver antenna terminals or a local AM signal is tuned in. The function switch is set for AM reception, and the BFO is switched off. An oscilloscope is connected to the output of the product detector. Capacitor C_{101} is set to about half range, and the secondary winding of the 455-kHz IF transformer, T_{100}, is adjusted for maximum audio output as indicated on the 'scope. The T_{100} primary is then adjusted for maximum output. If the primary does not peak, capacitor C_{101} is readjusted (starting with minimum capacitance) until peaking occurs. The receiver 455-kHz IF transformer is then readjusted for maximum output to compensate for the loading effect, and all previous adjustments are repeated.

With the BFO on, the receiver is switched for SSB reception. An SSB signal is tuned in, and the BFO is adjusted for normal intelligence. Capacitor C_{102} is then adjusted for maximum audio output. An excess BFO voltage reduces the output. In the CR-91, the BFO is coupled to the product detector through two capacitors. The capacitance between the tube pins of the 6J5 BFO octal socket, plus the capacitance provided by the additional twisted-wire "gimmick" in series, should yield the approximate amount of coupling required.

Conclusion

Successful results have been achieved by the author in converting both the RCA-CR-91 and the RCA-AR-88D general-purpose communications receivers to single-sideband operation. The CR-91 is similar to the AR-88 except that it has two low-frequency bands and a 735-kHz IF. T_{100} was modified to tune to this frequency by removing approximately 60 turns from the primary and secondary.

Strict attention to details of construction, and careful observance of RCA instructions in the handling of MOS-FET's, should provide the builder with an important additional function for his receiver at a moderate cost.

Reference: Barnes, S. H., and Luettgenau, G. G., "Designing with Low-Noise MOS FET's: A Little Different but no Harder," ELECTRONICS, December 14, 1964, page 53.

RCA
Ham Tips

VOL. 28, NO. 1 FEBRUARY, 1968

RCA Silicon Power Plastic Transistors In a Regulated DC-to-DC Converter

By D. W. Nelson, WB2EGZ*
RCA Defense Electronic Products

The RCA-2N5034 and RCA-2N5295 — key devices in the WB2EGZ converter circuit — belong to a family of the industry's most powerful plastic power transistors. The 2N5034 offers an exceptional power-dissipation capability of 83 watts (P_TMax), while the newly announced 2N5295 features a power-dissipation capability of 36 watts.

A unique, molded silicone-plastic package and ingenious lead design employed by this family of silicon n-p-n power transistors provide for simple mounting procedure. Transistor types are available either in "vertical-lead" configurations, which will fit standard sockets, or "horizontal-lead" versions for mounting on circuit boards. The 2N5034 is designed to fit a standard TO-3 socket, while the 2N5295 is easily accommodated by a TO-66 socket.

More than two years of rigorous field testing of these plastic devices in all types of applications have demonstrated product reliability and thermal characteristics approximating those of premium-quality non-plastic devices. "Hometaxial-base" construction of this new product family provides users with the industry's answer for freedom from transistor "second breakdown."

Figure 1: Exterior view of WB2EGZ DC-to-DC converter shows three silicon power plastic transistors mounted in center portion of heat sink. Two RCA-2N5034's are employed in the basic multivibrator circuit and one RCA-2N5295 in the series-regulator circuit. Unit is contained in a 3-by-5-by-7-inch minibox but circuitry can be compressed into even smaller space by experimenters seeking converter of minimal size.

---

*Central Engineering, Camden, New Jersey

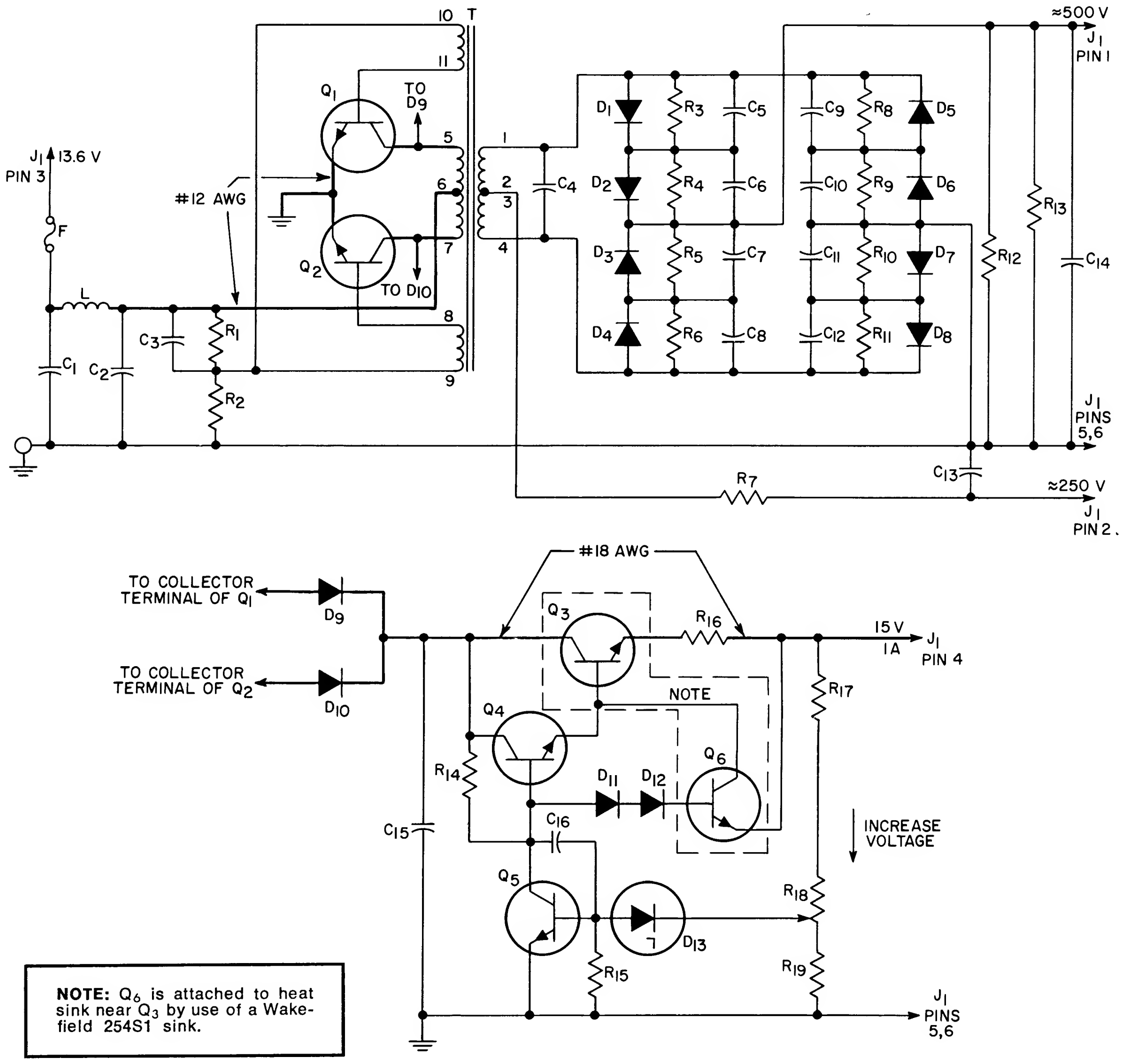

NOTE: Q_6 is attached to heat sink near Q_3 by use of a Wakefield 254S1 sink.

C_1 — 50 μf, 25 volt, electrolytic
C_2 — 1.0 μf, 50 volt, Mylar
C_3 — 100 μf, 25 volt, electrolytic
C_4 — 0.001 μf, 1,600 volt, paper
C_5 through C_{12} — 0.001 μf, 600 volt, ceramic disc
C_{13} — 10 μf, 450 volt, electrolytic
C_{14} — 1.0 μf, 1 kV, oil-filled bathtub (Cornell-Dubilier DYR-10100 or equiv.)
C_{15} — 50 μf, 50 volt, electrolytic
C_{16} — 0.02 μf, 50 volt, ceramic disc
D_1 through D_8 — RCA-1N5218
D_9 through D_{12} — RCA-1N5215
D_{13} — 8.2 volt, 400mW, regulator diode (1N757 or equiv.)
F — Fuse, 10 amperes
J_1 — Cinch Jones P306AB, or equiv.
L_1 — 50 turns, 12 AWG enamel, 2 layers, 0.375-inch I.D.
Q_1, Q_2 — RCA-2N5034
Q_3 — RCA-2N5295
Q_4, Q_5, Q_6 — RCA-40311
R_1 — 100 ohms, 10 watts, wirewound
R_2 — 10 ohms, 3 watts, wirewound
R_3 through R_6 and R_8 through R_{11} — 10 megohms, ½ watt, carbon
R_7 — 18 ohms, 1 watt, carbon
R_{12}, R_{13} — 470 kilohms, 2 watts, carbon
R_{14} — 2,700 ohms, ¼ watt, carbon
R_{15} — 1,800 ohms, ¼ watt, carbon
R_{16} — 0.33 ohm, 5 watts, wirewound
R_{17} — 560 ohms, ½ watt, carbon
R_{18} — 500 ohms, carbon potentiometer
R_{19} — 1,000 ohms, ½ watt, carbon
T — Toroidal Transistor DC-to-DC Supply Transformer; 12.6 volts input and 500/250 volts output; 125 watts; (Triad TY83 or equiv.)

Miscellaneous — Minibox (Bud CU-2108A or equiv.); heat sinks (Wakefield 254S1 and NC403K or equiv.)

Figure 2: Schematic diagram and parts list of WB2EGZ DC-to-DC converter.

A recurrent but seldom publicized problem confronting the radio amateur is the need for regulated low voltage in a transistorized mobile communications system. The stability of a receiver usually can be controlled by regulator (zener) diodes or even a separate battery, but a transmitter has more stringent requirements. An unregulated supply not only results in severe changes in power output, but may cause serious detuning as the supply voltage varies. The higher the transmitting frequency, the greater the need for regulation. Because class C transistors lose efficency at low voltages, it is desirable to provide a voltage source at some value exceeding the lowest voltage of an automotive system.

As described in this article, the author has satisfied the power requirements for a small, transistorized transmitter with the aid of a regulated DC-to-DC converter using standard components and featuring RCA's new silicon power plastic transistors. The regulated low-voltage system of this converter provides 1 ampere of current at 15 volts. For the amateur who has a tube application in mind, unregulated 250-volt and 500-volt sources are also available. The rating of the unregulated system of the converter is 125 watts and will provide 250 mA at 500 volts or 500 mA at 250 volts.

Circuit Description

The basic multivibrator circuit (see Figure 2) consists of two RCA-2N5034 transistors and the toroidal transformer. The transformer is driven into saturation first in one polarity and then the other. The squarewave has a frequency of 1,800 Hz. High-voltage DC is generated by the secondary of the transformer and a full-wave bridge consisting of eight RCA-1N5218 diffused-junction silicon rectifiers. Note the simplicity of filtering this supply. The reduction in filter requirements is due primarily to the high frequency (1,800 Hz) of commutation.

The center tap of the secondary winding is used for a 250-volt supply. Use of this voltage is dependent on individual requirements; therefore, relays for switching supplies were not incorporated in the system.

Low voltage for use with transistor circuits is first derived from a voltage doubler, then controlled by a series-regulator circuit which compensates for the wide voltage variations in an automobile power system. This circuit is capable of providing 1.2 amperes at 15 volts, continuous service, and may be used for receivers or low-power solid-state transmitters such as the one described in the Fall, 1966, issue of RCA Ham Tips, i. e., "A Solid-State A-M Transmitter for Two-Meter Operation."

Featured in the series-regulator circuit is the newly announced RCA-2N5295 silicon power plastic transistor (Q_3). An RCA-40311 transistor (Q_4), used in conjunction with the 2N5295 in a Darlington circuit, increases the gain of the pass transistor, Q_3, and thus improves its regulation. In order to compensate for variations in voltage at the output, a sample of that voltage must be fed to the base of the feedback amplifier, Q_5, which is also an RCA-40311 transistor. This link is provided by R_{17} and R_{18}. Because R_{18} is made adjustable, the desired output voltage is easily attained. The error signal is coupled to the feedback amplifier through an 8.2-volt zener diode (D_{13}) which provides the reference voltage for regulation.

An inherent problem in series-regulated power supplies of this type is that the semiconductors cannot be protected by fusing. A relatively simple technique for

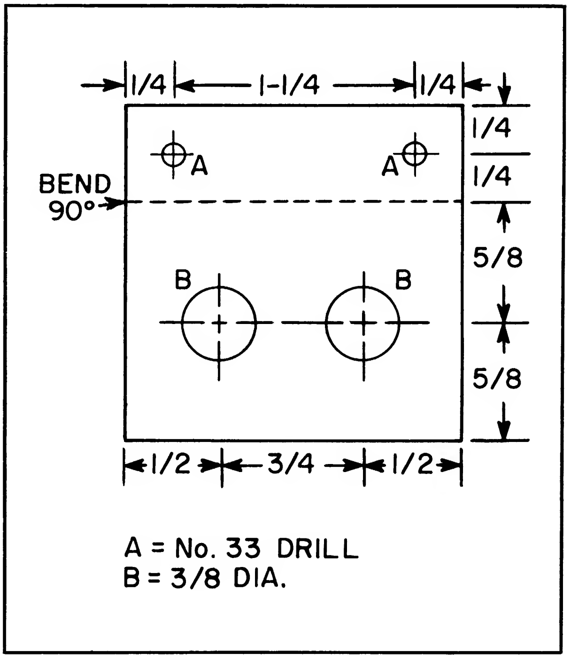

Figure 3: Layout of bracket used for mounting Q_4 and Q_5 in DC amplifier. (All dimensions are in inches.)

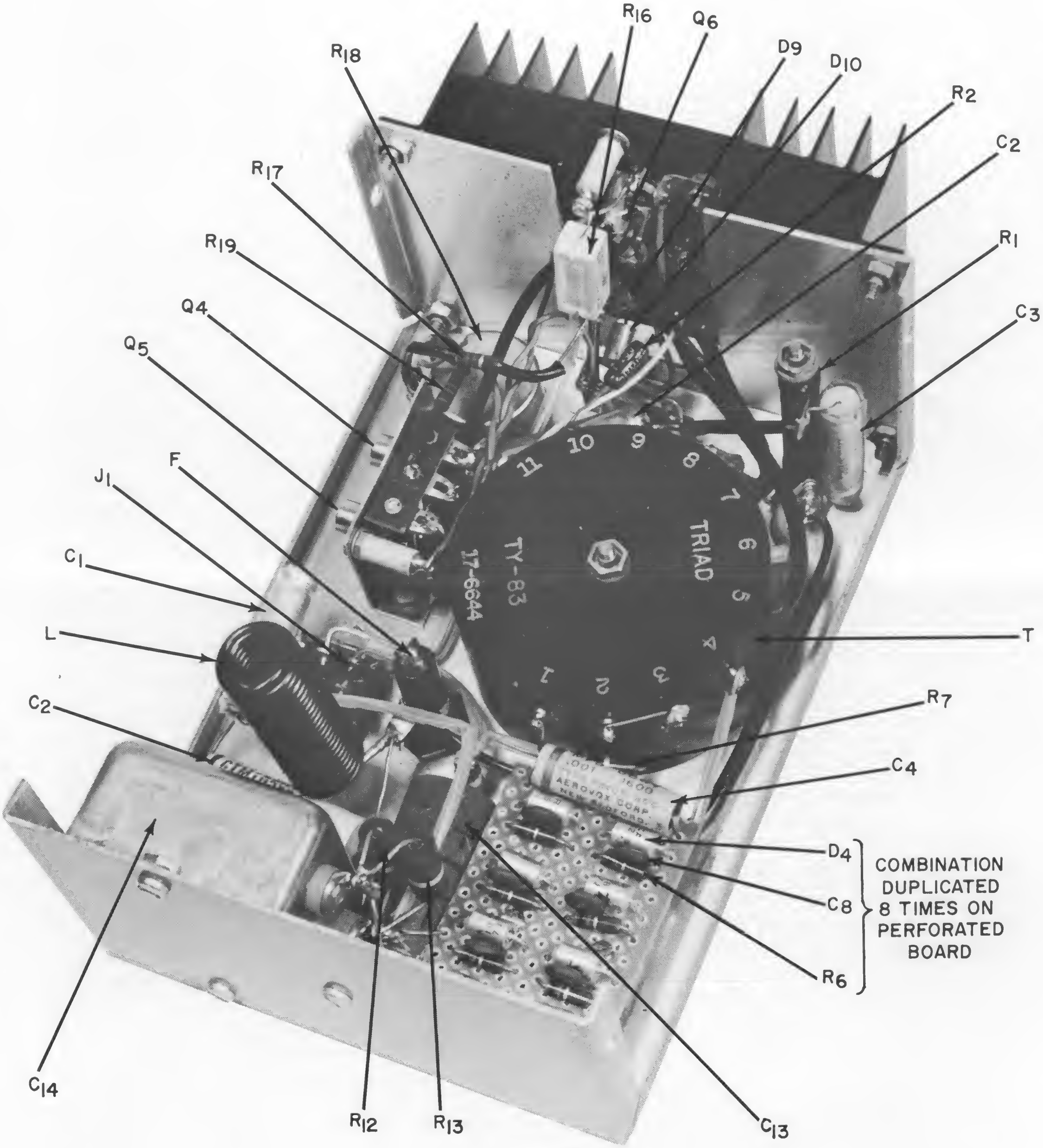

Figure 4: Interior view of DC-to-DC converter. The special heat sink for Q_6, which is bolted to the major heat sink, is not readily distinguishable in the photograph and lies directly in back of the 0.33-ohm wirewound resistor (R_{16}). End of minibox, lower right, obscures two diodes and associated resistors and capacitors which are mounted on perforated board.

limiting the current through the regulating circuit is described on Page 194 of the "RCA Silicon Power Circuits Manual" (Technical Series SP-50). This method is used here. Diodes D_{11}, D_{12}, and transistor Q_6 form a protective network which operates as follows:

When the current flowing through the pass transistor and R_{16} becomes greater than a preset level, current is allowed to flow through the diodes and the base-emitter junction of Q_6, and that transistor is turned on. With Q_6 in conduction, bias current is taken from Q_3, the pass transistor, so that the resistance of Q_3 is increased.

Values shown here start limiting the current at 1.2 amperes with an absolute limit of 1.5 amperes. The action of this circuit is sufficiently fast to protect the regulating circuit against instantaneous surges of current. The overall system is protected by a fuse.

Construction

All components, except the three silicon power plastic transistors, are contained in a 3-by-5-by-7-inch minibox. A heat sink with the power devices is bolted to one end of the minibox. This same end is cut to accommodate wiring to the heat-sunk components.

Because mobile equipment is subject to considerable vibration, it is important to use lock-nuts or lock-washers on every bolt in this power supply.

Figure 3 illustrates a bracket used for mounting the two transistors used in the low-voltage regulator. This assembly must be wired before it is mounted in the minibox. Construction can be simplified by commencing assembly and wiring at the heat sink.

If the converter is constructed as pictured in Figure 4, cooling should not be a problem. Transistor ratings, of course, are dependent on the temperature of the transistor junctions. The power transistors can be mounted securely to the major heat sink by use of insulating-mica and nylon washers supplied with the transistors. Both sides of the mica washers should be coated with a thermal compound, such as silicone grease.

To emphasize the importance of using correct wire sizes, minimum wire sizes are shown in critical places in the Figure 2 schematic. Where sizes are not designated, any small-diameter wire should prove suitable.

Modifying Construction to Meet Individual Requirements

While the converter design described in this article is intended to power large amateur mobile systems, it was the objective of the author to provide the experimenter with sufficient flexibility as a basis for constructive modification. An amateur whose power requirements are different from those provided by this particular converter may find it practical to reduce costs by selecting a smaller transformer and semiconductor devices which are less expensive. The power capability of the 2N5034's is not tapped in this application; the transistor type is used only for its current rating. A power transistor such as the 2N5295 may be used instead of the 2N5034 if the input current does not exceed 8 amperes. The author believes, however, that a more conservative 6-ampere limit would insure reliability for the smaller power types.

Further cost reduction is possible if the high-voltage requirements are lower. In a square-wave application such as described in this article, the peak reverse voltage (PRV) of the diodes must be at least twice the output voltage. Since spikes and other variations may be present, it would be prudent to use a PRV of three times the output voltage. When redesigning this section, the experimenter should first consider eliminating series-connected diodes and their associated resistor-capacitor networks.

The oversize chassis box was selected for reasons of component visibility. Actually, all the circuitry can be contained in a smaller space. No doubt most builders will find it practical to integrate the converter with other equipment in use. One version of the converter constructed without the 500-volt section was easily compressed into a 3-by-4-by-5-inch box.

A desirable circuit change which can best be determined by experimentation is the selection of components for spike elimination. The parts involved in this change include C_1, C_2, C_3, R_1, and R_2. While some circuits reviewed by the author have overlooked the need for spike, or overshoot, suppression, this consideration is vital to the operating efficiency and reliability of the converter. A perfect squarewave is op-

RCA HAM TIPS is published by the Electronic Components operation of RCA, Harrison, New Jersey. It is available free of charge from participating RCA Industrial Distributors. It is also available on a two-year subscription basis ($1 for eight issues to cover costs of handling and mailing). Please make check or money order payable to RCA, and remit to "RCA, Section 882, Harrison, N. J. 07029."

DISTRIBUTED BY
GEORGE D. BARBEY CO., INC.
READING LEBANON
LANCASTER POTTSTOWN

timum, but in no case should the spike exceed 10 per cent of the squarewave amplitude. The values selected in this circuit were optimum for no-load and full-load conditions. The builder, however, may require slight changes to compensate for differences in components.

Additional Considerations

Nominally set at 125 watts, the "rating" of this converter merits some further explanation. In a high-voltage application, the converter will supply maximum rated power. In other words, 250 mA of current is available at 500 volts, or 500 mA of current is available at 250 volts.

The regulated low-voltage system, on the other hand, does not function quite that simply. The regulator draws as much current as the output; therefore, an output of 1 ampere at 15 volts would require about 30 watts from the system instead of 15 watts. This consideration is very important for the experimenter who decides on a smaller toroid. The regulator contained in the author's circuit will handle currents to 1.2 amperes only. Extensive redesign would be necessary to derive higher power from this section.

It is possible that the DC-to-DC converter presented by the author will not start under heavy loads. In this respect, it should be mentioned that no special circuitry was incorporated because the converter was intended solely for normal operation in an amateur radio application. Satisfactory results can be expected by placing the converter in operation before applying a heavy load.

The importance of correct wire sizes and solid connections cannot be overemphasized. Undersized wire or a bad connection on the input or multivibrator sections will cause the unit to fail at high power levels.

Conclusion

The results obtained with this mobile power supply during WB2EGZ transmissions have been very gratifying. Stability, a "must" in low-voltage power supplies, is excellent in this converter.

For the transistor experimenter, new doors are being opened by the many advantages of higher, more useful voltages. As for the "old-timer" — well, he may just want to replace that tottering vibrator supply before it gives its last sigh in the middle of an important transmission.

RCA
Ham Tips

VOL. 28, NO. 2 JULY, 1968

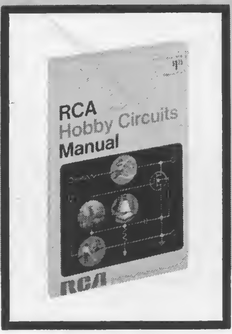

An Audio Control System for SSB

By George D. Hanchett, W2YM*
RCA Electronic Components

AUTHOR'S PREFACE: Although the radio amateur who likes to construct his own equipment is a vanishing breed, there are still lots of "Indians" left in the tribe of "Do-It-Yourselfers." For those of us who like the smell of rosin, there is especially happy news in a 224-page book just published by RCA. Titled the "RCA Solid-State HOBBY CIRCUITS MANUAL, HM-90" (Suggested Price $1.75), this book contains at least a baker's dozen of circuits that the radio amateur can build for use in his ham shack. In all, the new Hobby Circuits Manual contains 35 circuits covering also the interests of the motorist, the photographer, the music buff, the home owner, and the maker of electronic novelties and gadgets.

To acquaint the radio amateur with the material offered by the Manual in his direct interest, the following article first outlines the various circuits designed exclusively for applications in the ham shack. Following this, a concrete example of a useful project is provided in the discussion of a complete audio control system. This system — consisting of a microphone preamplifier, an audio oscillator, and an audio mixer, compressor, and line driver — is especially valuable for the amateur who operates SSB.

Figure 1: Exterior view of assembled audio control system for SSB, consisting of a microphone preamplifier, audio oscillator, and an audio mixer, compressor, and line driver.

---

*Solid-State Engineering, Linear-I.C. Applications, Somerville, New Jersey.

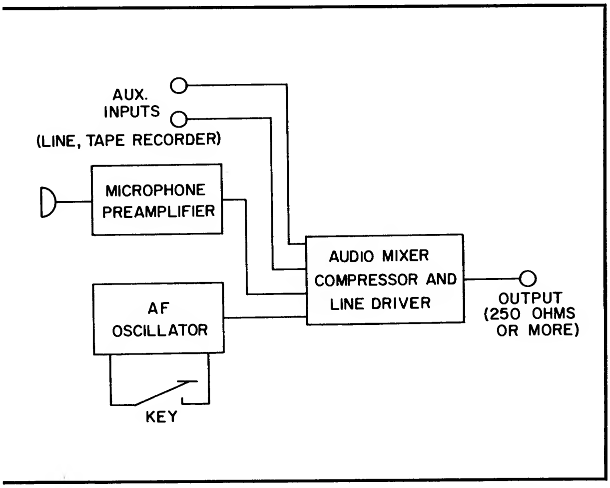

Figure 2: Block diagram of three circuits combined as an audio control system for SSB.

Circuits for Hams

In addition to the circuits covering the construction of an audio control system for SSB, the new "RCA Hobby Circuits Manual" contains numerous other circuits that can be used to advantage by the radio amateur. Complete, detailed instructions are provided for the construction of an integrated-circuit code-practice oscillator; a semi-automatic electronic keyer; an automatic keyer; a frequency-selective AF amplifier; an audio amplifier; a dip/wave meter; a variable-frequency oscillator; a VFO calibrator; an audio-frequency-operated switch; and power supplies. Included with the construction information for these circuits are layout diagrams and full-size drilling templates for circuit boards, as well as operating and adjustment data.

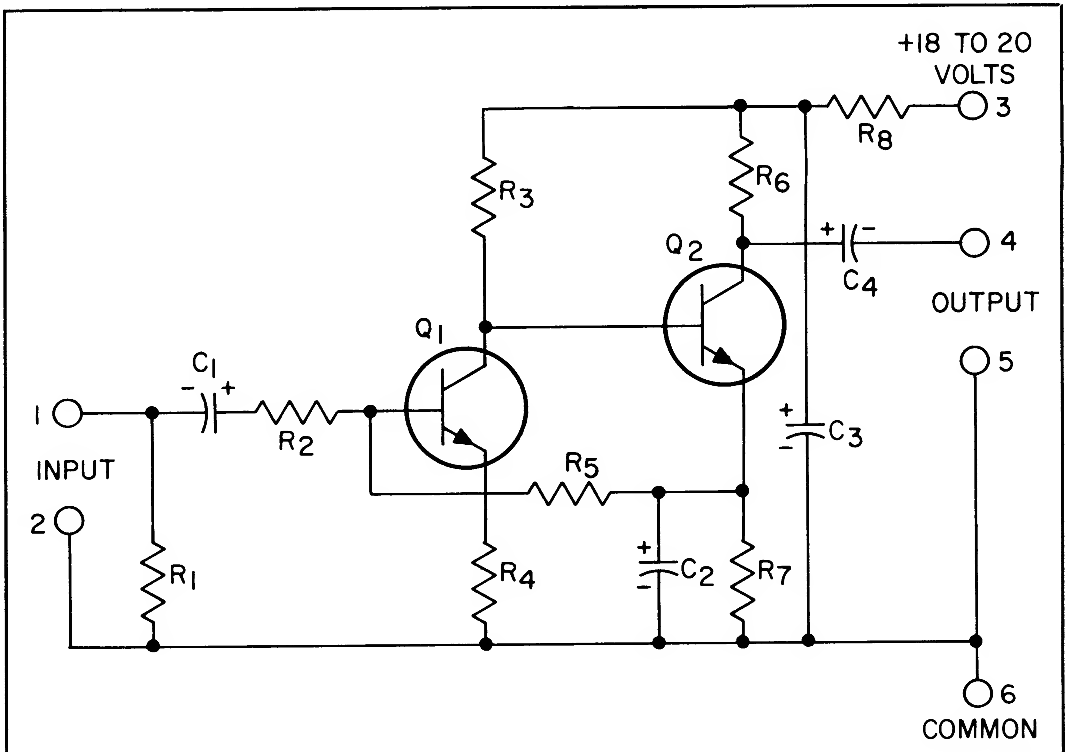

C_1 — 25 microfarads, 6 volts, electrolytic

C_2 — 300 microfarads, 6 volts, electrolytic

C_3 — 100 microfarads, 25 volts, electrolytic

C_4 — 20 microfarads, 25 volts, electrolytic

Q_1, Q_2 — Transistor, RCA SK3020

R_1 — 220 ohms for low-impedance microphone; 270,000 ohms for high-impedance microphone; ½ watt, 10%

R_2 — 10,000 ohms, ½ watt, 10%
R_3 — 27,000 ohms, ½ watt, 10%
R_4 — 100 ohms, ½ watt, 10%
R_5 — 120,000 ohms, ½ watt, 10%
R_6 — 3,900 ohms, ½ watt, 10%
R_7 — 680 ohms, ½ watt, 10%
R_8 — 1,500 ohms, ½ watt, 10%

Figure 3: Schematic diagram and parts list for microphone preamplifier circuit.

The integrated-circuit code-practice oscillator is a simple but highly useful circuit that can be used in a code class.

The semi-automatic key generates a dot or a series of dots, depending on how long the paddle-key is held in the dot position; dashes must be made manually. The fully automatic electronic keyer, on the other hand, generates both dots and dashes automatically. The dot repetition rate of the semi-automatic keyer and the dot and dash repetition rate of the fully automatic keyer can be varied by means of a speed potentiometer. Both of these keyers make quality code-transmission easier.

The frequency-selective audio-frequency amplifier is designed to amplify signals at only one predetermined frequency; at this frequency, the voltage gain is about 20 to 30. At other frequencies, the gain is approximately unity. This circuit is very useful under conditions of heavy interference because it has the ability to eliminate the side noise and let the desired signal through.

The audio amplifier is a general-purpose, high-fidelity unit that can be used around the ham shack in any application that requires an amplifier with a power output up to 7½ watts. The amplifier is compatible with all of the audio circuits in the Manual that require amplification.

The dip/wave meter is an extremely useful tool for the radio amateur or the experimenter in electronics because it allows him to measure the resonant frequency and consequently the inductance and capacitance of both energized and unenergized radio-frequency circuits. The meter is battery-operated and hand-held.

Control of frequencies from 3.5 MHz through 148 MHz on the amateur band is possible with the variable-frequency oscillator circuit. The MOS field-effect transistor used in the circuit requires an operating potential of only 10 volts; this voltage can be obtained from an automobile or dry battery through a regulator, or from one of the low-voltage power supplies described in the Manual. Because the MOS transistor generates so little heat, the entire VFO can be enclosed in a box with its tuning coils and capacitors.

The VFO calibrator can be used by a ham operator to calibrate points on a VFO dial or on any signal generator. A separate 100-kHz output provided by the calibrator can also be used to align receivers and calibrate test equipment, such as grid-dip meters.

The most likely application of the audio-frequency-operated switch for the radio amateur is to control a radio transmitter. The AF switch eliminates the need for manual action and is designed with a slight delay action on turn-off so that pauses in speech will not cause the transmitter to turn off prematurely.

Four power supplies are described in the Manual. The voltages of two power supplies are predetermined and fixed; the voltages of the others are continuously variable within the rated values of the supplies. The output voltage of the fixed supplies is determined by fixed circuit components. The universal series power supply is designed to provide output voltages from 6 volts to 35 volts; the universal shunt supply provides 6 volts or less. The two continuously variable supplies are designed to deliver voltages in the ranges of 4.5 to 12 volts and zero to 12 volts, respectively. The 4.5- to 12-volt design is the simpler, more economical of the two. The maximum output current for any of these supplies is 1 ampere.

Audio Control System for SSB

The three circuits designed for joint use as a high-performance solid-state audio control system are particularly suited for SSB, but can also be used very effectively for high-quality tape recording systems and other high-fidelity audio applications.

Figure 1 shows the microphone preamplifier, audio oscillator, and audio mixer, compressor, and line driver assembled as a completed audio control system. Figure 2 shows a block diagram of these three circuits when used as an audio control system for SSB. The construction details for each of the three components of this system are given in the sections which follow.

Microphone Preamplifier

The microphone preamplifier is capable of boosting the output of a dynamic microphone to a 0.5- to 1.0-volt level. It is a two-stage, direct-coupled amplifier with enough feedback to maintain excellent frequency response and extremely low distortion. As with all solid-state preamplifiers, the operating impedance levels are such that this unit has a very low susceptibility to RF pickup and is therefore very stable. The preamplifier works equally well with low-impedance microphones (approximately 250 ohms) or with high-impedance dynamic microphones (approximately 30,000 ohms).

Circuit Operation:

The schematic diagram and parts list for the microphone preamplifier are shown in Figure 3. When the circuit is in operation, base bias current for the input transistor, Q_1, is obtained from the emitter of output transistor Q_2 through R_5. Q_2 obtains its base bias current through the collector resistor of Q_1, R_3. This unique bias circuit provides DC feedback for stabilization of the operating points of the transistors. For example, if the operating current of Q_1 increases, the collector voltage of Q_1 decreases and reduces the voltage of the base of Q_2. This lower voltage causes a reduction in the operating current of Q_2. When the operating current of Q_2 decreases, the voltage at the emitter of Q_2 also decreases. This voltage decrease is reflected back to the base of Q_1, which undergoes a current reduction that offsets the initial increase.

This preamplifier circuit is designed to operate from an 18- to 20-volt source; voltage in this range can be obtained from batteries or from a power supply. The power circuit can be common to the power amplifier. The preamplifier circuit can tolerate voltages greater than 20 volts if R_8 is increased about 400 ohms for every volt above 20 volts. The current drain of the preamplifier is approximately 2.5 milliamperes; the voltage gain is 1,700.

Special Considerations:

When the preamplifier is used with a low-impedance dynamic microphone (such as the RCA-HK97 in the low-impedance mode), R_1 should be 220 ohms; when a microphone

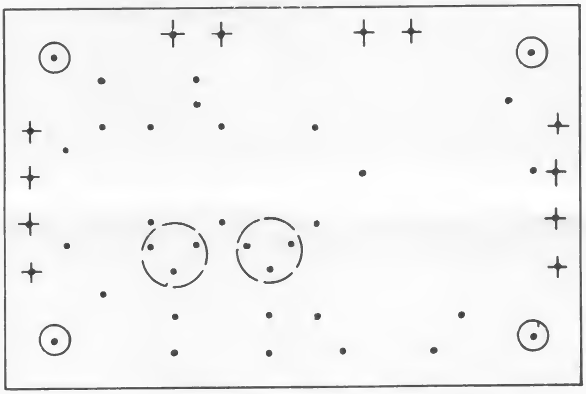

Figure 4: Drilling template for microphone preamplifier (scale 1 inch = 1 inch).

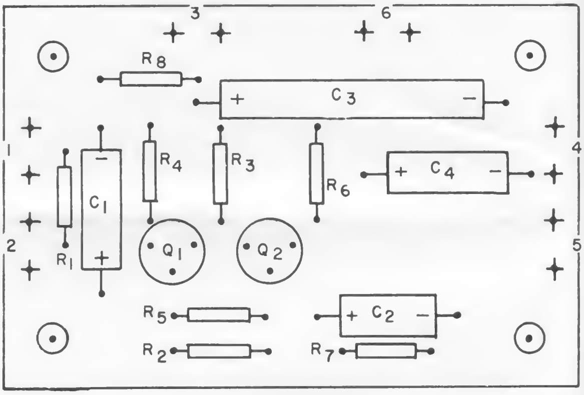

Figure 5: Component placement diagram for microphone preamplifier.

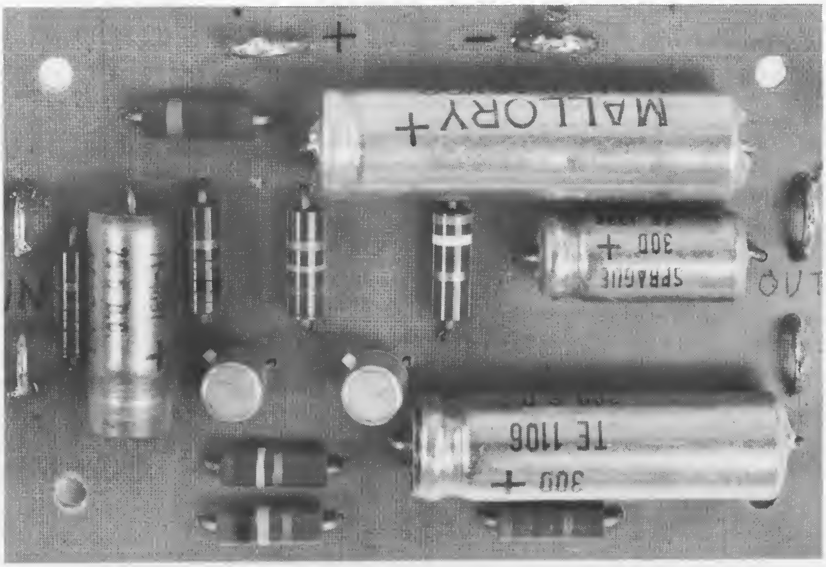

Figure 6: Components for microphone preamplifier mounted on circuit board.

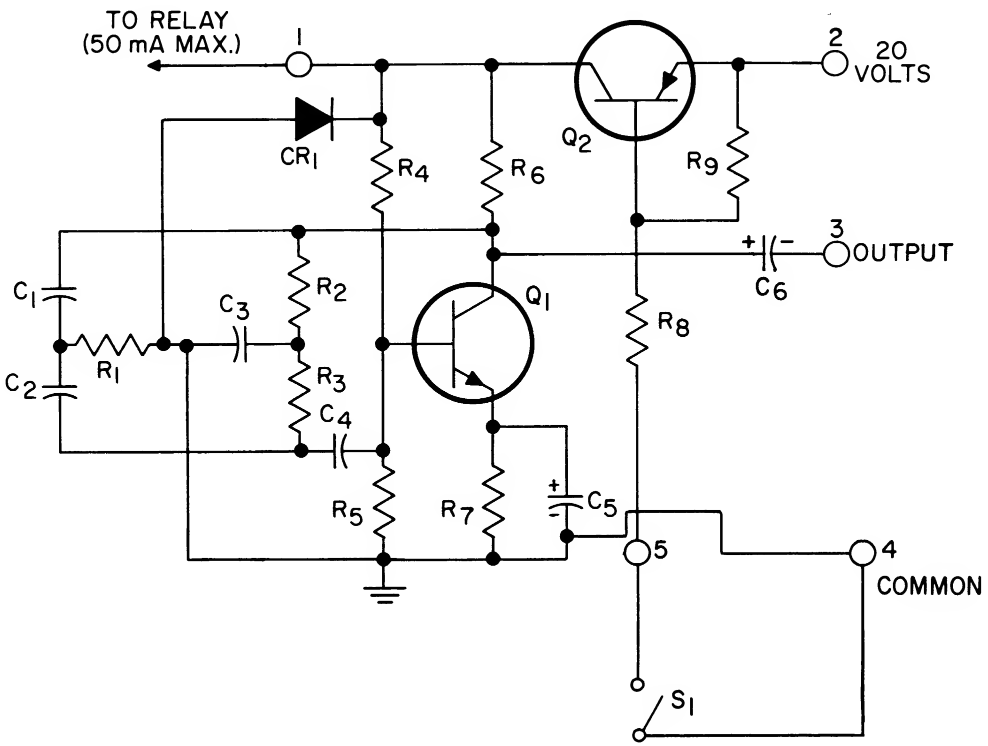

C_1, C_2 — 0.0047 microfarad
C_3, C_4 — 0.01 microfarad
C_5 — 1 microfarad, 6 volts, electrolytic
C_6 — 5 microfarads, 6 volts, electrolytic

CR_1 — Silicon rectifier, RCA SK3030
Q_1 — Transistor, RCA SK3020
Q_2 — Transistor, RCA SK3005
R_1 — 10,000 ohms, ½ watt, 10%
R_2, R_3 — 47,000 ohms, ½ watt, 10%

R_4 — 100,000 ohms, ½ watt, 10%
R_5 — 22,000 ohms, ½ watt, 10%
R_6 — 6,800 ohms, ½ watt, 10%
R_7 — 2,200 ohms, ½ watt, 10%
R_8 — 12,000 ohms, ½ watt, 10%
R_9 — 470 ohms, ½ watt, 10%
S_1 — Telegraph key or switch

Figure 7: Schematic diagram and parts list for audio oscillator circuit.

with an impedance of about 30,000 ohms is used (such as the RCA-HK97 in the high-impedance mode), R_1 should be 270,000 ohms.

Construction:

The drilling template for the microphone preamplifier is shown in Figure 4. A component placement diagram and a photograph of the completed circuit board are shown in Figures 5 and 6, respectively. A single preamplifier circuit fits on a 3-by-2-inch circuit board; two can be built on a 3-by-4-inch board, and three on a 3-by-6-inch board. If the circuit is not constructed on a board, a ground bus should be used to ground the preamplifier to the circuits that follow it at one point only, preferably at the input to the circuits.

Functions and Circuit Operation of the Audio Oscillator

The audio oscillator, although designed originally for code practice, is excellently suited to provide a sine-wave signal for SSB transmitter tune-up.

The schematic diagram and parts list for the audio oscillator are shown in Figure 7. Transistor Q_1, capacitors C_1, C_2, C_3, and C_4, and resistors R_1, R_2, and R_3 form a basic twin-T oscillator. Transistor Q_1 is an audio amplifier; its collector is connected to the twin-T network composed of C_1, C_2, and C_3, and R_1, R_2, and R_3. The output of this network is applied to the base of transistor Q_1 through capacitor C_4, and supplies the feedback required for oscillation.

When the circuit is used to key a relay or

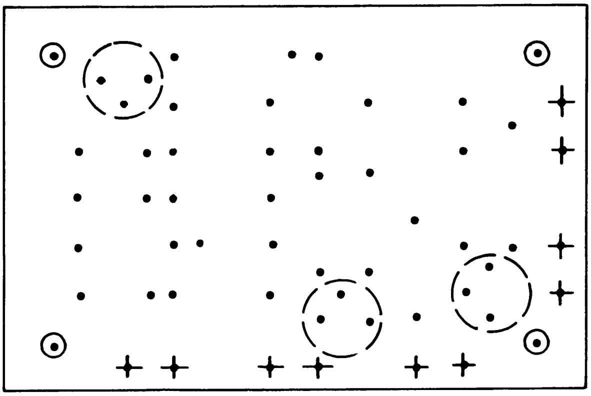

Figure 8: Drilling template for audio oscillator (scale 1 inch = 1 inch).

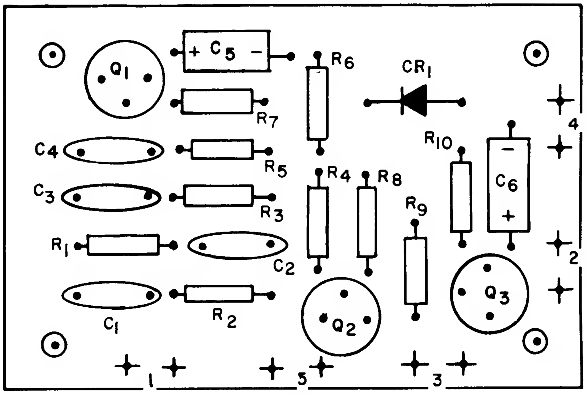

Figure 9: Component placement for audio oscillator. (Note that Q_3 and R_{10} are omitted).

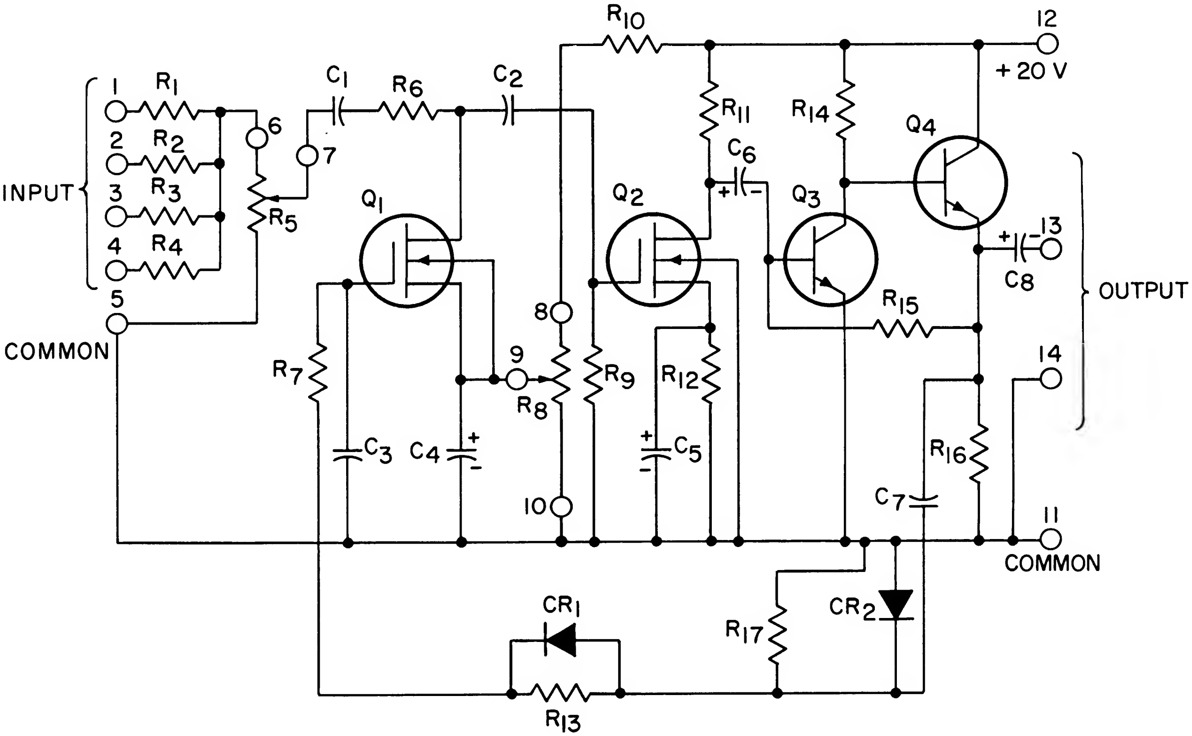

C_1, C_2, C_3, C_7 — 0.1 microfarad, paper

C_4 — 10 microfarads, 12 volts, electrolytic

C_5 — 15 microfarads, 6 volts, electrolytic

C_6 — 5 microfarads, 25 volts, electrolytic

C_8 — 50 microfarads, 25 volts, electrolytic

CR_1, CR_2 — Germanium rectifier, type 1N270

Q_1, Q_2 — MOS field-effect transistor type 3N128

Q_3, Q_4 — Transistor, RCA SK3020

R_1, R_2, R_3, R_4, R_7 – 100,000 ohms, ½ watt, 10%

R_5 — Potentiometer, 10,000 ohms, audio taper

R_6 — 180,000 ohms, ½ watt, 10%

R_8 — Potentiometer, 5,000 ohms, straight taper

R_9, R_{13} — 1 megohm, ½ watt, 10%

R_{10} — 15,000 ohms, ½ watt, 10%

R_{11} — 10,000 ohms, ½ watt, 10%

R_{12} — 1,500 ohms, ½ watt, 10%

R_{14} — 1,200 ohms, ½ watt, 10%

R_{15} — 100,000 ohms, ½ watt, 10%

R_{16} — 470 ohms, ½ watt, 10%

R_{17} — 2 megohms, ½ watt, 10%

Figure 10: Schematic diagram and parts list for audio-mixer, compressor, and line-driver circuit.

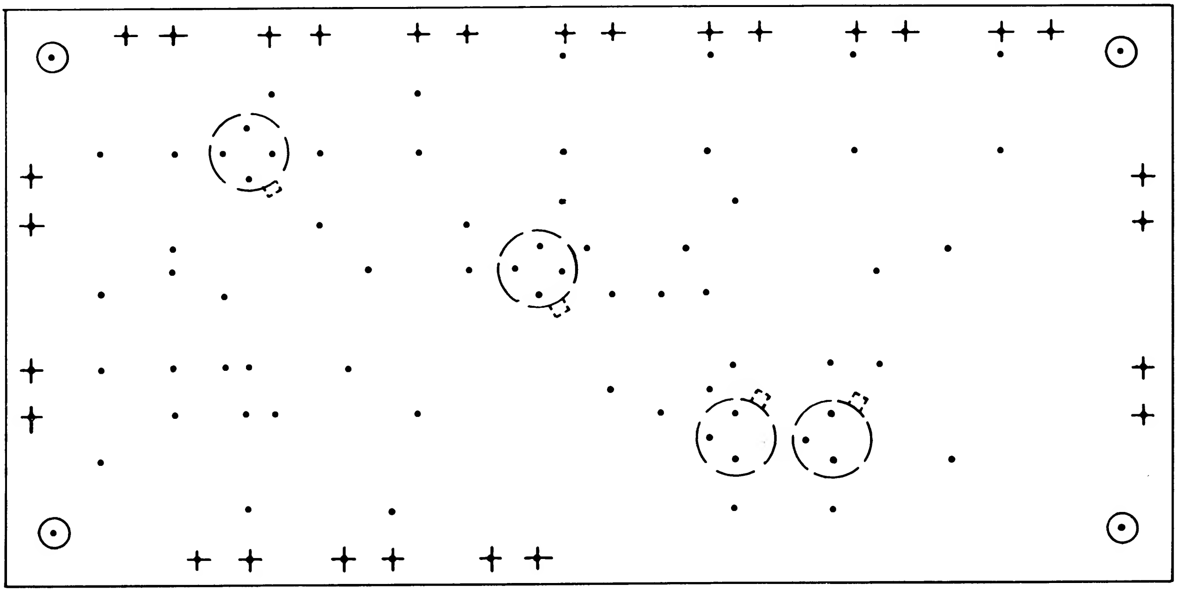

Figure 11: Drilling template for audio mixer, compressor, and line driver (scale 1 inch = 1 inch).

when it is desired to reduce the duty cycle of the transmitter, the supply voltage should be 20 volts. Transistor Q_2 switches power to Q_1 as well as to the relay. Diode CR_1 protects Q_2 from the high inductive voltages that are present at the terminals of a relay when the relay-coil circuit is interrupted.

Construction:

The drilling template for the audio oscillator is shown in Figure 8 and a component-placement diagram in Figure 9. The template provides for the addition of an emitter-follower stage which is not needed when this circuit is used with the audio-mixer, compressor, and line-driver circuit.

Audio Mixer, Compressor, and Line Driver

The audio-mixer, compressor, and line-driver circuit is used to combine the outputs from the preamplifier and oscillator along with two additional inputs. The compressor portion of this circuit can be adjusted so that any input signal level between 50 millivolts and 1.0 volt will provide an output of approximately 1.0 volt. The line driver is designed for operation at 1-volt rms into a line of 250 ohms.

Circuit Operation:

The schematic diagram and parts list for the audio-mixer, compressor, and line-driver circuit are shown in Figure 10. The circuit consists of a four-channel resistive mixer; an MOS transistor (Q_1) that acts as a voltage-variable resistor; a high-impedance MOS transistor amplifier (Q_2); and a two-stage bipolar line driver.

The gain of each input can be controlled by use of a 50,000-ohm potentiometer between the output of the preamplifier or other source and the input of the mixer stage. Potentiometer R_5 is the master gain control; it controls all channels simultaneously.

The initial bias voltage for Q_1 is set by adjustment of potentiometer R_8. When Q_1 is biased off, it has an effective drain-to-source resistance of several megohms. This high resistance allows nearly all of the signal voltage appearing at the potentiometer arm of R_5 to appear at the gate of Q_2. The signal is amplified by Q_2 and passed to the output-amplifier and line-driver transistors, Q_3 and Q_4. The output signal of Q_4 is rectified by CR_2 and the resultant DC signal is fed back to the gate of Q_1. The rectified output signal is polarized in such a way that its application to Q_1 reduces the drain-to-source resistance of that transistor. The re-

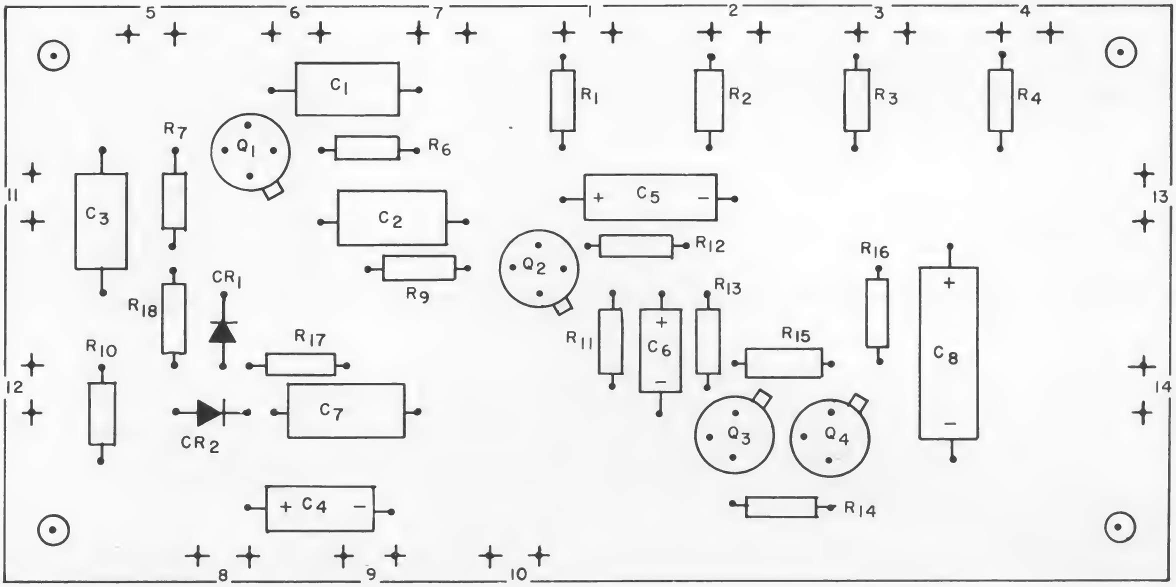

Figure 12: Component placement for audio-mixer, compressor, and line-driver circuit.

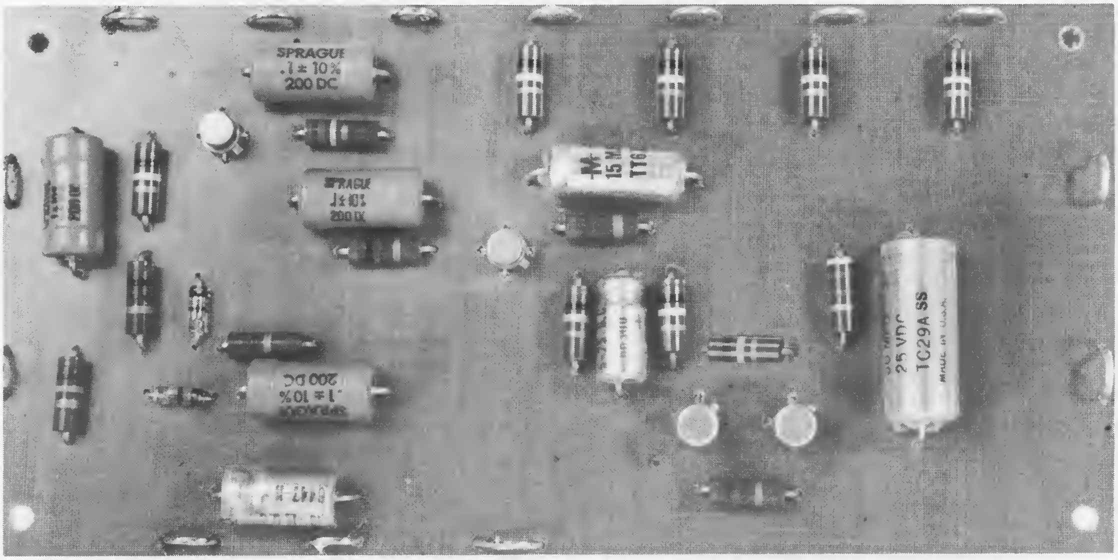

Figure 13: Components for audio-mixer, compressor, and line-driver circuit mounted on circuit board.

sult is a reduced input to Q_2 and an over-all reduction in amplifier gain. CR_1 is inserted in the feedback line so that the rectified DC signal can be applied very rapidly to the gate of Q_1 and to C_3. During this application, C_3 is charged at a very fast rate. The discharge time of C_3 is slow because CR_1 forces the discharge current to flow through R_{18}. The product of this arrangement of CR_1, R_{18}, and C_3 is a circuit that has a fast attack time and a relatively slow release time. A fast attack time is a very desirable characteristic in a circuit of this type because it provides for immediate reduction in system gain and consequent prevention of the overload that could occur with loud speech. The delayed release time helps to maintain a constant level of output during small pauses in speech. Q_4 is connected as an emitter-follower to provide the amplifier with a low output impedance. Circuit current drain is about 23 milliamperes at 20 volts.

Construction:

The drilling template for the audio mixer, compressor, and line driver is shown in Figure 11. A component placement diagram and the completed circuit board appear in Figures 12 and 13, respectively.

Anxious to get started on this unit as soon as possible? If so, your reaction is typical of those being experienced by readers of the new "RCA Hobby Circuits Manual," throughout the country. The audio control system for SSB is but one of the exciting projects offered by this book to brighten your daily living. There are dozens more.

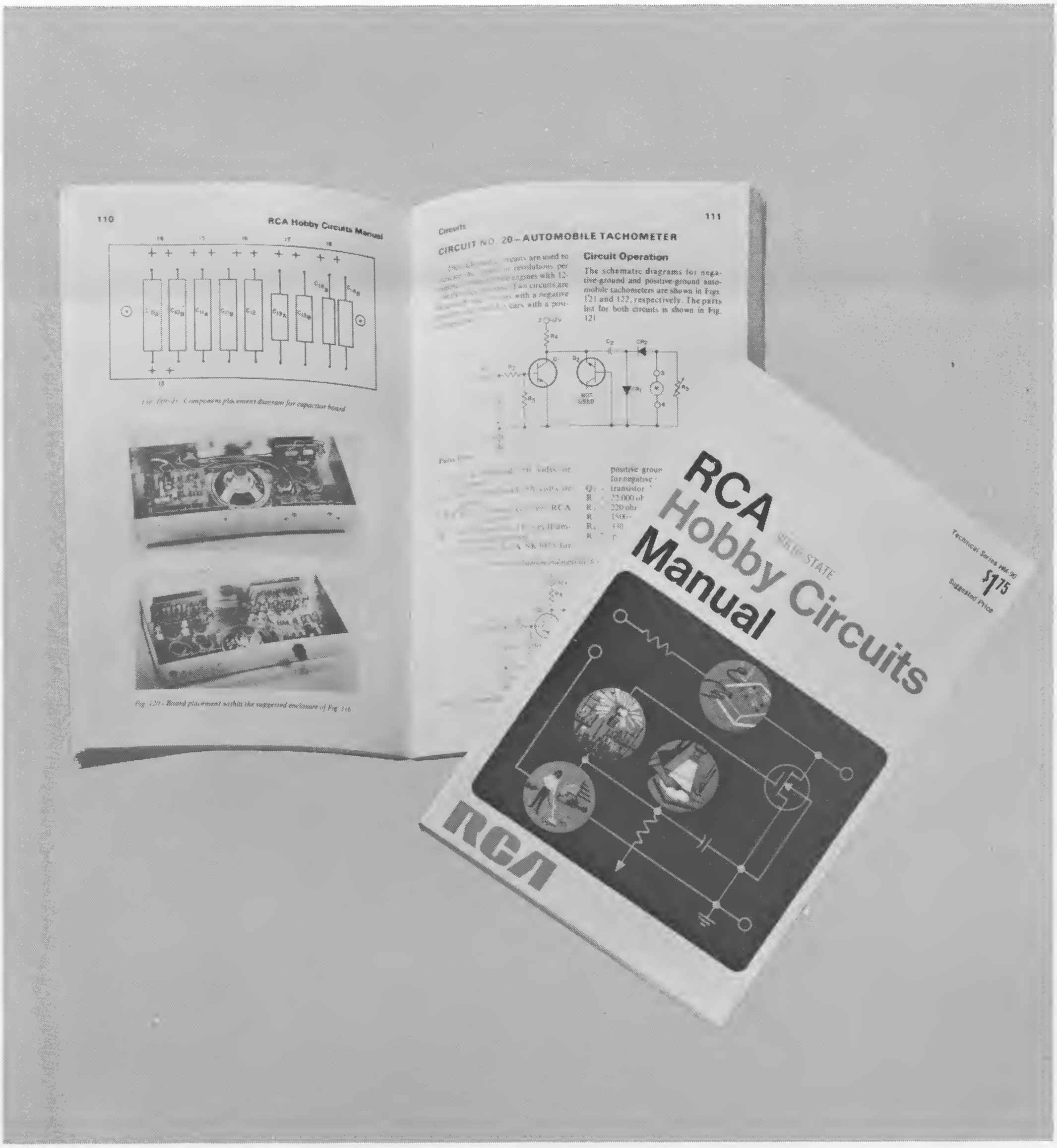

RCA HAM TIPS is published by the Electronic Components operation of RCA, Harrison, New Jersey. It is available free of charge from participating RCA Industrial Distributors. It is also available on a two-year subscription basis ($1 for eight issues to cover costs of handling and mailing). Please make check or money order payable to RCA, and remit to "RCA, Section 882, Harrison, N. J. 07029."

DISTRIBUTED BY
GEORGE D. BARBEY CO., INC.
READING LEBANON
LANCASTER POTTSTOWN

Join the "big guns" on the bands...

On 'Phone, 9 of the top 10 DX'rs...on CW, 7 of the top 10 and...on VHF, 8 of the top 10...use *RCA Tubes*

Right across the ARRL "Honor Roll"—'Phone or CW, low band or VHF—the top scorers were checked by an independent research organization. The findings: the largest percentage of the "big guns" use RCA transmitting tubes! Whether they run commercial or homebrew rigs!

For dependable power that slices through QRM and QRN—lets you break through the pile-ups and take full advantage of band conditions—see your RCA Authorized Industrial Tube Distributor for power tubes—rated "tops" by the leaders.

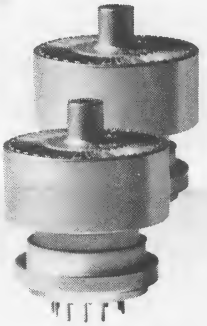

Small Size—
BIG POWER!

RCA-8122—paired for maximum legal input in CW and voice operations up to 500 MHz. See your RCA Distributor or write RCA Electronic Components, Commercial Engineering, Section 0000 , Harrison, N.J. 07029, for data sheet giving full ICAS specs.

RCA

RCA Ham Tips

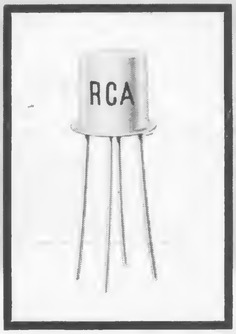

VOL. 28, NO. 3 NOVEMBER, 1968

A Dual-Gate MOS-FET Preamplifier For the 10-Meter Band

By G. E. Yewdall, W2DMR, and D. W. Nelson, WB2EGZ
RCA Defense Electronic Products*

AUTHORS' PREFACE: Older-type receivers frequently lack the gain necessary to ferret out weaker signals on the 10-meter band. An ideal solution to this problem is provided by an inexpensive, easily constructed preamplifier which exploits outstanding performance characteristics of RCA's recently developed dual-gate metal-oxide-semiconductor (MOS) field-effect transistor. In building this unit, the radio amateur is given an excellent opportunity to learn the full scope and many benefits of the MOS-FET in ham-shack applications. The preamplifier discussed in the article which follows boasts a gain of 26 dB without special neutralization. A noise figure of 2 dB can be appreciated when quiet conditions exist.

A dual-gate field-effect transistor, such as the RCA-3N140 used in the preamplifier described in this article, is equivalent electrically to two single-gate transistors connected in cascode and enclosed in the same package. In some respects, the resulting transistor resembles a tetrode tube; however, the main intent in using a dual-gate transistor in the preamplifier is to provide an inexpensive cascode circuit that offers maximum resistance to cross-modulation from nearby stations.

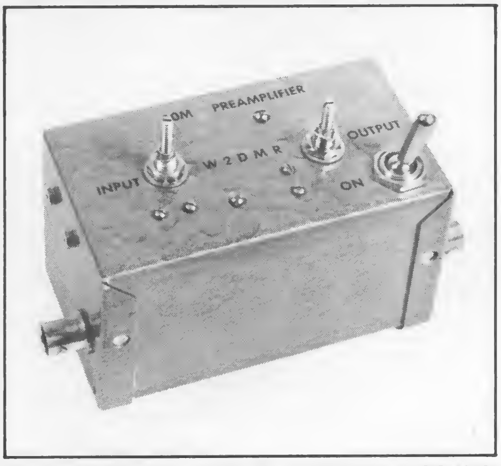

Figure 1: Exterior view of completed MOS-FET preamplifier designed by W2DMR and WB2EGZ for 10-meter operation. Unit measures 4-by-2¼-by-2¼ inches.

In Figure 2 are illustrated three evolutionary stages of the cascode amplifier designed to reduce cross-modulation distortion. Illustration "a" shows a tube circuit that was widely acclaimed for its superior cross-modulation reduction. The two single-gate MOS field-effect-transistor equivalent of the tube circuit is shown in Illustration "b." Finally, in Illustration "c," is the dual-gate MOS field-effect-transistor amplifier — or electrical equivalent of the cascode circuits — which provides the basis for the 10-meter preamplifier constructed by the authors.

---

*Camden, New Jersey

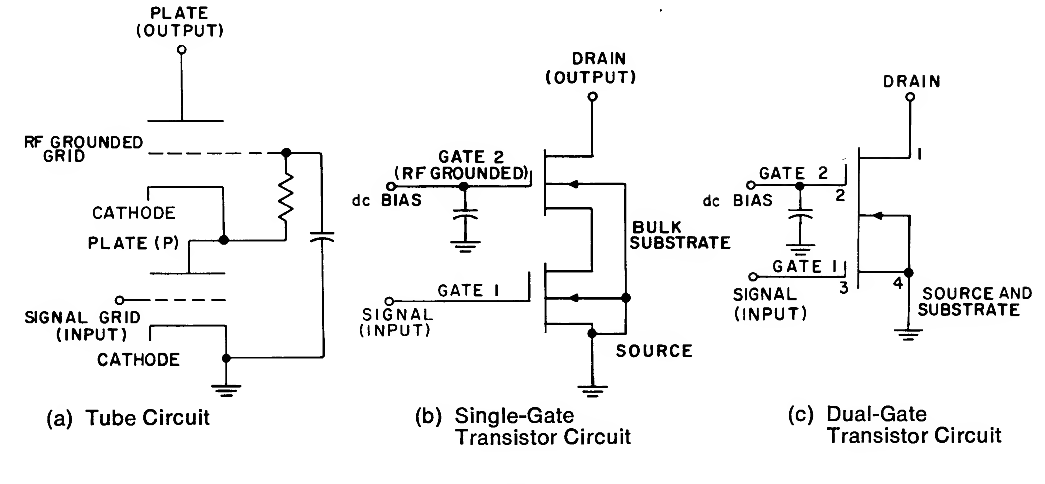

(a) Tube Circuit (b) Single-Gate Transistor Circuit (c) Dual-Gate Transistor Circuit

Figure 2: Evolutionary stages of a cascode amplifier designed to reduce cross-modulation distortion.

Circuit Operation

Figure 3 shows the circuit schematic and parts list of the W2DMR/WB2EGZ 28-30-MHz preamplifier. Figure 4 illustrates the basing diagram of the dual-gate MOS-FET transistor. Gate 1 (Lead 3) is forward-biased by R_1 and R_2 to raise its quiescent potential above ground.

Inspection of the circuit shows that the value of the source resistor, R_6, is large enough so that Gate 1 will always be negative with respect to the source. You have probably recognized the resemblance of this configuration to that of an old tube circuit which was used to equalize gain differences in high-gain tubes by shifting their transfer characteristics. Although the authors found no great differences between individual dual-gate transistors of the same type, the circuit just described should help to guarantee uniform results and eliminate the need for selecting parts.

Gate 2 is at RF ground potential through C_2, in accordance with cascode-circuit requirements. The DC bias level, established

Figure 3: Schematic diagram and parts list for 10-meter preamplifier circuit.

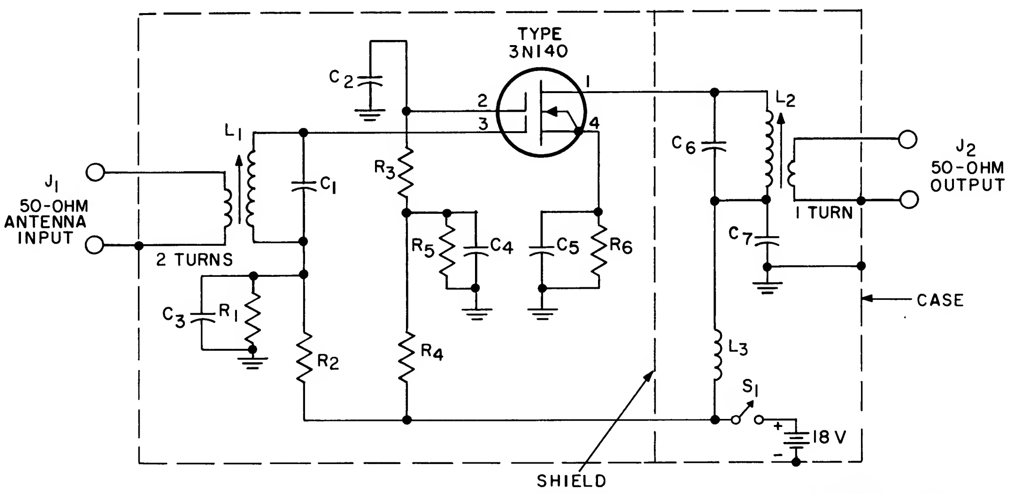

C_1 — 8 picofarads, mica or ceramic tubular
C_2, C_3, C_4, C_5, C_7 — 0.01 microfarad, ceramic
C_6 — 10 picofarads, mica or ceramic tubular
R_1 — 27,000 ohms, ¼ watt, 10%
R_2 — 150,000 ohms, ¼ watt, 10%, carbon
R_3 — 1,800 ohms, ¼ watt, 10%, carbon
R_4 — 100,000 ohms, ¼ watt, 10%, carbon
R_5 — 33,000 ohms, ¼ watt, 10%, carbon
R_6 — 270 ohms, ¼ watt, 10%, carbon
L_1, L_2 — 1.6 to 3.1 microhenries, adjustable (Miller 4404 or equiv.)
L_3 — 22 microhenries (Miller 74F-225A1 or equiv.)
Q_1 — RCA-3N140 MOS field-effect transistor
S_1 — Toggle switch, single-pole, single-throw
J_1, J_2 — Coaxial receptacle (Amphenol BNC type UG-1094 or equiv.)

Miscellaneous — Two RCA Type VS323 batteries for transistor service; and one case (Bud-CU2103A or equivalent).

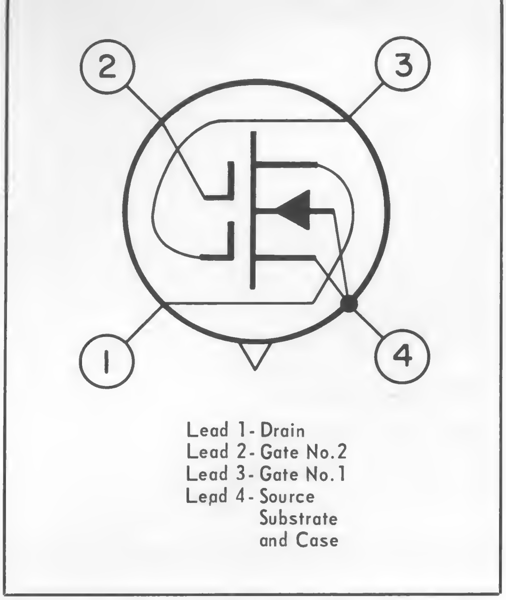

Figure 4: Base diagram of dual-gate MOS field-effect transistor.

by R_4 and R_5, is a compromise between optimum gain and optimum cross-modulation resistance.

Powering of the unit by batteries, as shown in Figure 3, is not mandatory. Any reasonably well-filtered DC voltage between 15 and 18 volts is suitable.

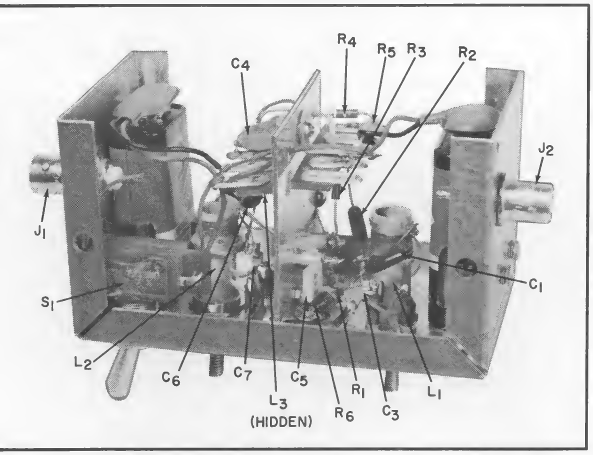

Figure 5: In this photo showing interior of 10-meter preamplifier, MOS field-effect transistor is obscured by the ceramic-standoff insulators mounted on the center partition.

Adapting the Preamplifier To Other Frequencies

The RCA-3N140 has excellent performance characteristics up to 200 MHz. Consequently, the circuit can be used at higher frequencies with only a few changes (see Table I). For example, both tanks in the preamplifier circuit can be made to tune to 21 MHz (15 meters) by changing only C_1 and C_6 to 22 picofarads.

It must be remembered that wiring becomes critical at 50 MHz, and even more critical at 144 MHz. Bypass-capacitor leads and all leads carrying RF signals should be made as short as possible. A well-con-

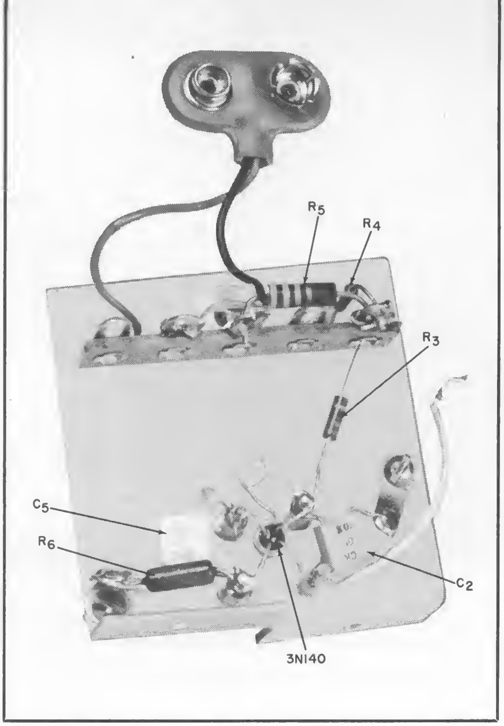

Figure 6: Detailed view of preamplifier's center partition shows method of mounting the RCA-3N140 MOS field-effect transistor. Note that the transistor leads have been short-circuited by a piece of fine, bare wire. This wire is removed after all transistor connections have been made by merely pulling on the looped portion.

Table I — Values of Circuit Components For 21 and 50 MHz

Component	Value	
	21 MHz	50 MHz
C_1	22 pF	8 pF
C_2, C_3, C_4, C_5, C_7	No Change	1,000 pF, ceramic
C_6	22 pF	10 pF
L_1	No Change	8 turns, No. 30 E wire on ¼-inch-diameter core (Miller 4500 or equiv.) Link: 2 turns, No. 30 E wire on ground end.
L_2	No Change	Same as L_1
L_3	No Change	6.8 μH (Miller 74F686AP or equiv.)

RCA HAM TIPS is published by the Electronic Components operation of RCA, Harrison, New Jersey. It is available free of charge from participating RCA Industrial Distributors. It is also available on a two-year subscription basis ($1 for eight issues to cover costs of handling and mailing). Please make check or money order payable to RCA, and remit to "RCA, Section 882, Harrison, N. J. 07029."

structed circuit will show only a slight degradation of the 26-dB gain and the 2-dB noise figure at 50 MHz. At 144 MHz, the authors have achieved gains in excess of 20 dB with noise figures of 2.8 dB.

Special Handling of MOS Field-Effect Transistors

Special care must be exercised when wiring an MOS transistor into a circuit. For example, there is always a possibility that the transistor can be damaged if static electricity is discharged across the oxide layer. Such risk can be virtually eliminated, however, if all leads are shorted until the completion of all wiring. The RCA-3N140 comes supplied with a protective ring which shorts the leads. This ring should be removed before wiring is commenced, and a fine, bare wire wrapped around the leads near the case. The shorting wire should not be removed until all soldering is completed.

Some builders may prefer to use a socket instead of soldering the transistor directly into the circuit. This practice is acceptable when used in conjunction with the rules listed below. (All transistor failures experienced by the authors have been traceable to violations of these rules. Please observe them carefully.):

- Keep transistor leads shorted until the transistor is completely connected to the circuit.
- Never insert or remove the transistor when power is on. (This rule applies to all transistors.)
- When cutting leads, grasp the leads and case simultaneously. This action will reduce the possibility of mechanical and electrical shock.

Adjustments

Preamplifier tuning is simplified because no special neutralization is needed — even at 144 MHz. Rough adjustments of the coils may be made by use of a grid-dip oscillator. The finishing touches are made while listening to a weak station.

It was rewarding for the authors to discover that a neighboring amateur's 1-kilowatt transmitter — only 200 feet distant — did not overload the preamplifier. At the same time, this word of caution is extended to the preamplifier builder with regard to his own high-power transmitter: Be certain that the coaxial relay has sufficient isolation to prevent transistor overload.

By following all the precautions mentioned, the builder should succeed in achieving a preamplifier of superior operational stature. Although small in size, the RCA-3N140 dual-gate MOS field-effect transistor is a giant in performance.

Suggested Reading:

Carlson, F. M., and McKeon, E. F., "Small-Signal RF Amplification of MOS Devices," NEC Proceedings, 1966.

Kleinman, H. M., "Application of Dual-Gate MOS Field-Effect Transistors in Practical Radio Receivers," IEEE Transactions on Broadcast and TV Receivers, July, 1967.

Nelson, D. W., "The Two-Meter Winner," Ham Radio Magazine, August, 1968, pp 22-29.

RCA
Ham Tips

VOL. 28, NO. 4 DECEMBER, 1968

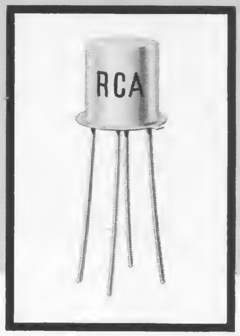

A Single-Gate MOS-FET Preamplifier For the 2-Meter Band

By R. M. Mendelson, W2OKO
RCA Electronic Components*

RCA MOS insulated-gate field-effect transistors are N-channel, depletion-type silicon devices, and are available in both single-gate and dual-gate types. Both types offer the advantages of extremely high input resistance, low input capacitance, very low feedback capacitance, high forward transconductance, and low noise at very high frequencies. Because of their insulated-gate construction, these devices have extremely low leakage currents which are relatively insensitive to temperature variations. In addition, their drain currents have a negative temperature coefficient which makes "thermal runaway" virtually impossible.

In the preceding issue of "Ham Tips" (November, 1968), Authors D. W. Nelson, WB2EGZ, and G. E. Yewdall, W2DMR, discussed the use of a dual-gate device in the construction of an MOS-FET preamplifier for the 10-meter band. R. M. Mendelson, W2OKO, now offers the radio amateur a choice of two single-gate types, either of which may be successfully employed for construction of an MOS-FET preamplifier affording excellent coverage of the 2-meter band.

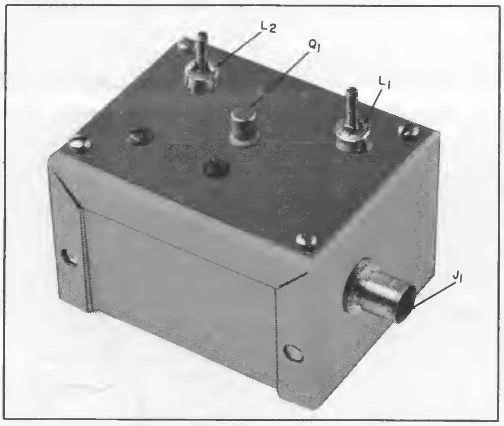

Figure 1: Exterior view of W2OKO preamplifier shows how brass-plate chassis is mounted on top of the minibox. Call-outs indicate locations of the two tuning capacitors, the MOS field-effect transistor, and the coaxial jack.

The major disadvantage of bipolar transistorized RF amplifiers is their poor cross-modulation characteristics; an otherwise excellent, high-gain, low-noise amplifier can be useless in a reception area with strong local signals. Today, this handicap can be easily overcome by utilizing the superior performance qualities of the RCA metal-oxide - semiconductor (MOS) field - effect transistor. For example, two single-gate types — the RCA-3N128 and RCA-40467A — demonstrate (at maximum gain) cross-modulation characteristics equal to or better than those of the best vacuum tubes. Because these types have noise figures in the order of 3.5 dB at 200 MHz, they are ideal for 2-meter operation. Their small size, instant startup, excellent reliability, and minimum power requirements (12.6 volts at 5 milliamperes) are additional features

---

* Somerville, New Jersey

which help meet the requirements of a high-quality preamplifier.

The circuit described in this article is a single-stage preamplifier that may be used ahead of an existing 2-meter converter or as the input stage of a new solid-state converter. As illustrated in the Figure-2 schematic diagram, the circuit is straightforward and unburdensome, and use of the full-scale template (Figure 3) should expedite its completion in a few hours.

Construction

By following the illustrated layout, builders should be able to avoid any difficulty and at the same time find it relatively simple to align the preamplifier. Use of a copper or brass plate for the chassis will provide a good, solderable RF ground. This brass-plate chassis serves as the cover of a minibox from which a top section has been cut out. If coils are wound as specified and then mounted close to the tuning capacitors, no problem should be encountered in tuning the preamplifier to cover the full 4-megahertz range of the 2-meter band.

One special precaution must be observed when handling any MOS field-effect transistor; the leads must be shorted together until the device is plugged into its socket or soldered into place. Neglect of this procedure may result in permanent damage to the transistor from electrostatic discharge. After the device is in the socket, the possibility of damage by electrostatic discharge is very remote because of relatively low impedance paths between the transistor elements. MOS-FET's are factory-packaged with thin, bare, protective wiring which shorts the leads. Similar-type wiring should be wrapped around the leads prior to wiring, and should not be removed until soldering is completed. If it becomes necessary to remove a device from a socket, the shorting wire should be replaced prior to removal. No power should be applied to the circuit while the transistor is being inserted into or removed from its socket, and no soldering should be performed at the socket while the device is plugged in.

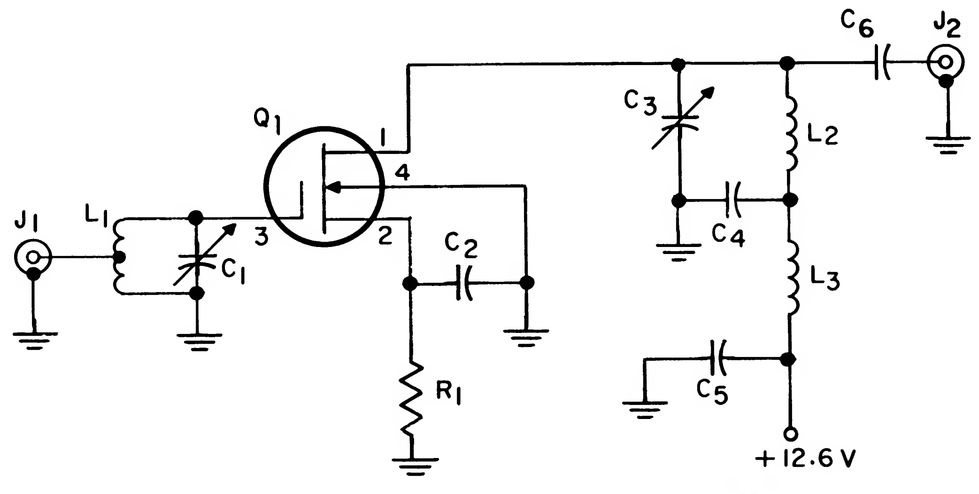

C_1, C_3 — 0.5-5 picofarads, tubular trimmer (Erie 532-3R or equiv.)

C_2 — 500 picofarads, silver button (Erie 662-003-501K or equiv.)

C_4 — 25 picofarads, silver button (Erie 662-003-250 or equiv.)

C_5 — 1,000 picofarads, ceramic disc (Centralab DD-102 or equiv.)

C_6 — 3.3 picofarads, ceramic tubular (Centralab TCZ-3R3 or equiv.)

J_1, J_2 — BNC-type coaxial jack

L_1 — 5 turns, No. 16 bare wire, ¼-inch diameter, close-spaced; tap 1 turn up from bottom; **do not short turns**

L_2 — 3 turns, No. 16 bare wire, ¼-inch diameter, spaced to ½ inch total length

L_3 — RF choke, 1 microhenry

Q_1 — MOS field-effect transistor, RCA-40467A or RCA-3N128

R_1 — 270 ohms, ½ watt

Miscellaneous — One power socket (Jones P302AB or equiv.); one transistor socket with four contacts; one brass plate 2⅝ by 2 inches; one minibox 2¾ by 2⅛ by 1⅝ inches (Bud CU3000A or equiv.).

Figure 2: Schematic diagram and parts list for 2-meter preamplifier circuit.

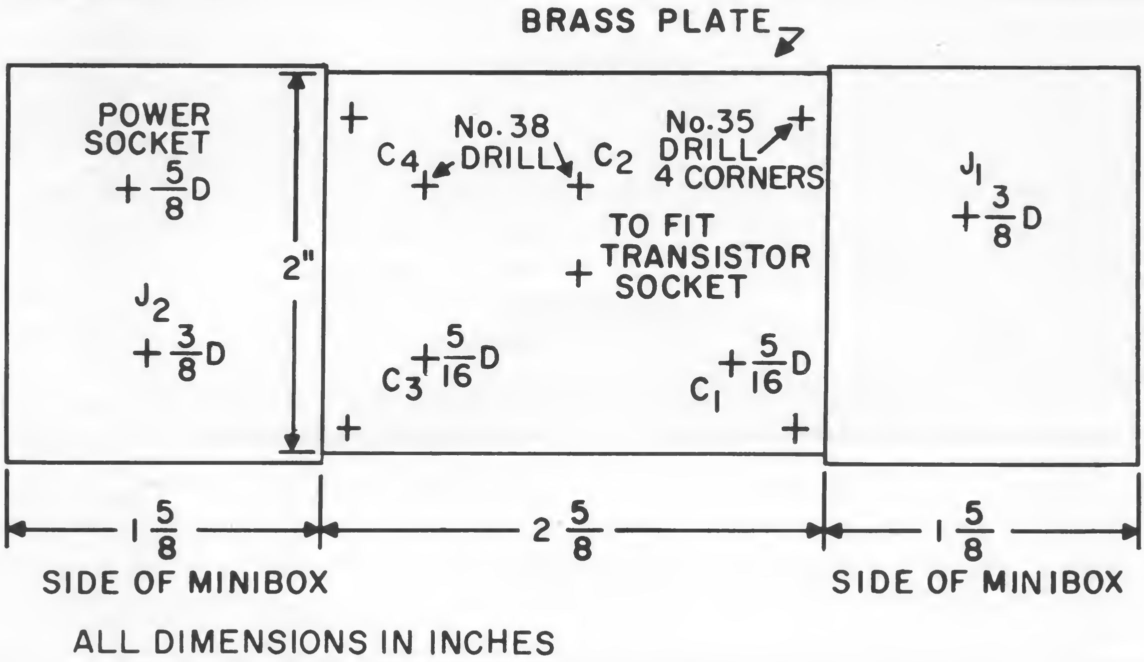

Figure 3: Full-scale drilling template for brass-plate chassis and two sides of minibox.

Preamplifier Alignment

Alignment of the MOS-FET preamplifier can be accomplished without test equipment and consists solely of two screwdriver adjustments. First, the preamplifier is connected to the antenna and 2-meter converter, and power is applied. The 12.6-volt power supply can vary one volt either way without ill effects. This power may be obtained from the same source that feeds the solid-state converter; from the cathode of the audio-output stage of the communications receiver; from a suitable voltage divider to any positive power point in the receiver; or even from a battery. These power sources have been detailed by the author in a previous issue of "Ham Tips" (see footnote reference below).

Next, a signal near 145 MHz is tuned in and the antenna-tuned circuit is peaked for maximum signal. If no maximum can be found, the coil turns should be either squeezed closer or spread slightly apart until peaking occurs. The maximum will not be too sharp since the circuit will pass the full 4-MHz range of the 2-meter band. A signal near 147 MHz is then tuned in, and the tuning steps repeated at the output circuit. After the preamplifier is checked for even gain across the band, the job is done.

If strong local signals have been blocking your solid-state converter, your troubles are ended. You now have an MOS-FET preamplifier that gives you an improved noise figure, generally better reception, and maintenance-free performance.

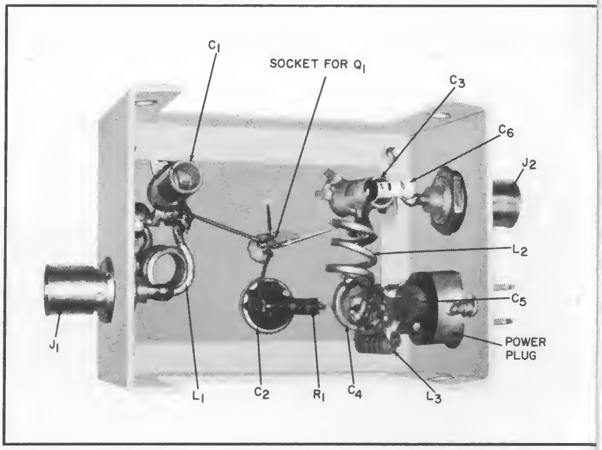

Figure 4: Interior view of assembled preamplifier showing location of all components. Note that short, straight leads are used to obtain good VHF operation.

"All Transistor Two-Meter Converter," Vol. 26, No. 1, Winter, 1965-66.

RCA HAM TIPS is published by the Electronic Components operation of RCA, Harrison, New Jersey. It is available free of charge from participating RCA Industrial Distributors. It is also available on a two-year subscription basis ($1 for eight issues to cover costs of handling and mailing). Please make check or money order payable to RCA, and remit to "RCA, Section 882, Harrison, N. J. 07029."

GEORGE D. BARBEY CO., INC.
Reading Pottstown
Lancaster Lebanon

Recalled by Popular Demand...

The RCA Amateur Radio Tie Clip!

Handsomer than ever, the new, superbly designed RCA Amateur Radio Tie Clip (1G1242) features a miniature code key, reproduced in authentic, three-dimensional detail and finished in 22-karat gold. The miniature code key bears a discrete new RCA monogram, and is mounted on a gleaming, 1½-inch hand-polished bar which offers ample room for the wearer to add his station call letters. Each tie clip comes packaged in a gray felt bag and white jewel box.

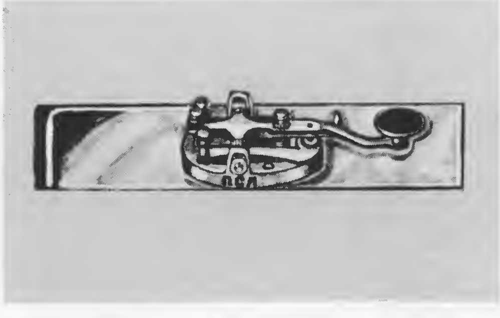

Available in Mid-January, 1969 From Participating RCA Distributors